THIS COPY IS PROVIDED ON A RESTRICTED BASIS AND IS NOT TO BE USED IN ANY WAY DETRIMENTAL TO THE INTERESTS OF PANDUIT CORP.

PANDUIT PART #	STUD SIZE		DIMENSIONS in. [mm]					TOOLS
	ENGLISH	METRIC	L ± .03 [0,51]	W ± .01 [0,25]	C ± .02 [0,38]	M ± .03 [0,51]	H ± .01 [0,25]	
PMV1-3FB	--	M3	.85 [21,6]	.23 [5,84]	.19 [4,83]	.71 [18,03]	.13 [3,30]	CT-100A *CT-160 *CT-260 *CT-400 CT-600-A (CT-500CH) CT-600-A (CT-550CH) CT-1550 CT-1551 CT-2500 (CT-2550CH)
PV18-6F	#6	M3,5	.86 [21,8]	.30 [7,6]	.21 [5,3]	.69 [17,5]	.15 [3,8]	
PV18-6FN	#6	M3,5	.85 [21,6]	.24 [6,1]	.21 [5,3]	.69 [17,5]	.15 [3,8]	
PV18-8F	#8	M4	.93 [23,6]	.32 [8,1]	.25 [6,4]	.73 [18,5]	.17 [4,3]	
PV18-10F	#10	--	.93 [23,6]	.35 [8,9]	.25 [6,4]	.75 [19,1]	.20 [5,1]	
PV18-10FN	#10	--	.93 [23,6]	.31 [7,9]	.25 [6,4]	.75 [19,1]	.20 [5,1]	
PMV1-5FB	--	M5	.93 [23,6]	.36 [9,14]	.24 [6,10]	.76 [19,30]	.20 [5,1]	

*PANDUIT APPROVED TOOL

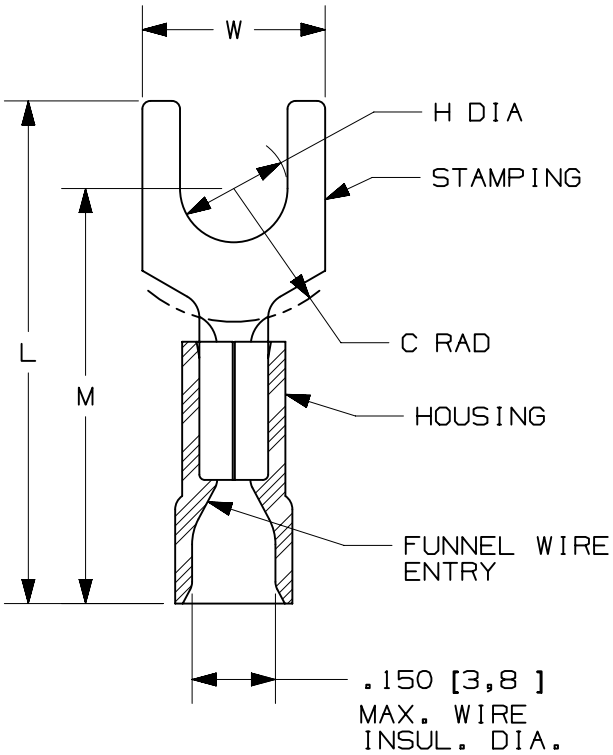

NOTES:

1. cULus LISTED FOR:
   A. 22-16 AWG [0,5-1,5 mm²] SOLID OR STRANDED COPPER WIRE
   B. 221°F [105°C] MAX. OPERATING TEMPERATURE
   C. 600V. MAX. BLDG WIRE
      (1000 V. MAX. IN SIGNS, FIXTURES & LUMINAIRES)
2. SEE www.panduit.com FOR PACKAGE QUANTITIES
3. MATERIAL:
   A. STAMPING: .032" [0,8] THK COPPER, TIN PLATED
   B. HOUSING: VINYL, RED
4. DIMENSIONS IN BRACKETS ARE METRIC EQUIVALENT
5. WIRE STRIP LENGTH: 5/16 $^{+1/32}_{-0}$ [7,9 $^{+0,8}_{-0}$]

c UL us
LISTED
587H
E52164

REV	DATE	BY	CHK	APR	DESCRIPTION	ECN
09	07/14	MBY	JHNU	RGB	REVISED NOTES, MOVED TOOLS TO TABLE, REVISED CERTIFICATION	N41194BA-A41194
08	07.17.12	BDK	LCA	VMB	ADDED PMV1-3FB AND PMV1-5FB. ADDED METRIC EQUIVALENT. CHANGE PACKAGING NOTE. REVISED INSTALLATION TOOLS NOTE. BROUGHT DRAWING TO CURRENT STANDARDS.	N41194BA-DC

TITLE
2 PC. VINYL INSULATED, #22-18 BARREL, FORKS
CUSTOMER DRAWING

ITEM REVISION NAME: N41194BA/09
DATASET FILE NAME: N41194BA_DC/09A

PANDUIT™

UNLESS OTHERWISE SPECIFIED, DIMENSIONAL TOLERANCES ARE: IN [mm]
.X ± .XXX ±
.XX ± ANGLES ±
THIRD ANGLE PROJECTION

MATERIAL: SEE NOTES

DRAWING NUMBER: A41194

DRAWN BY	DATE	CHK	SCALE	SHEET 1 OF 1	SIZE
FES	-	FS	N.T.S.		A

D10100DA/12