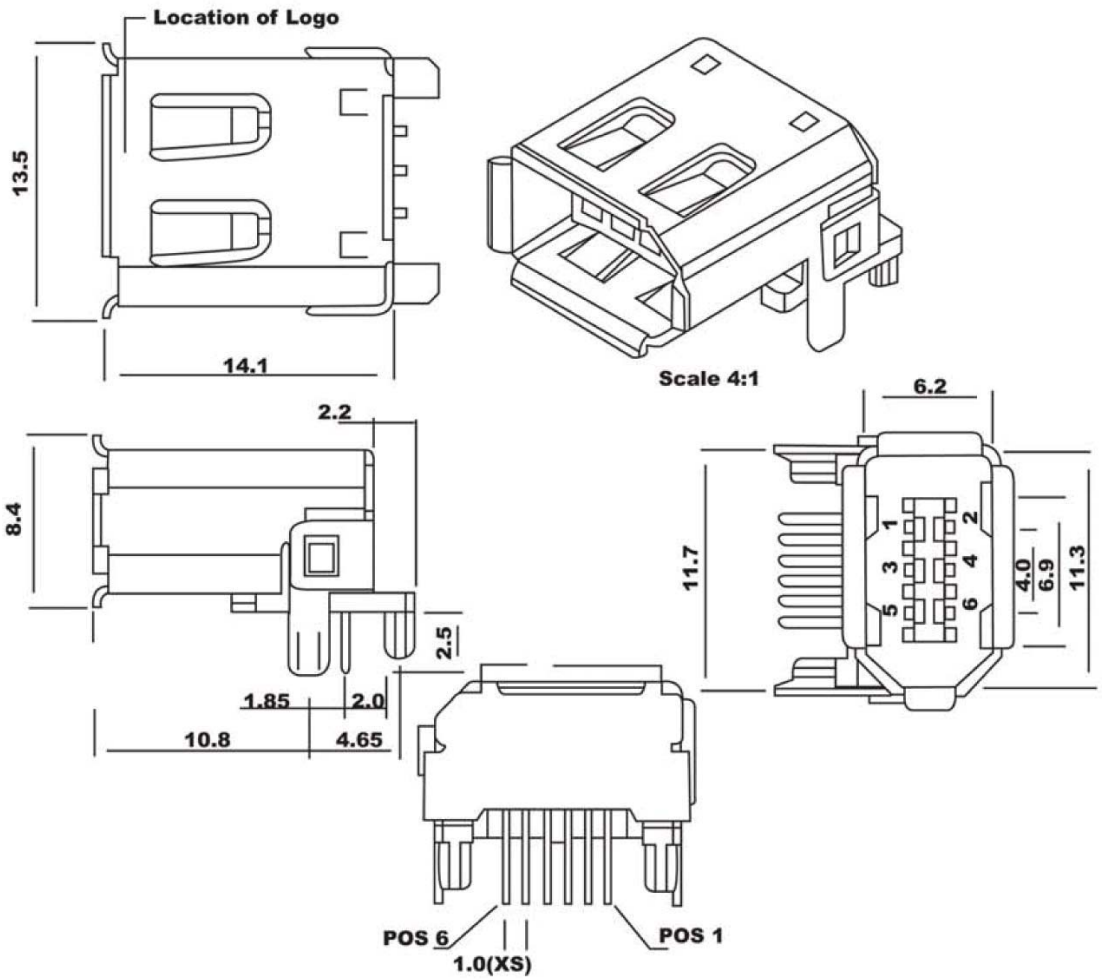

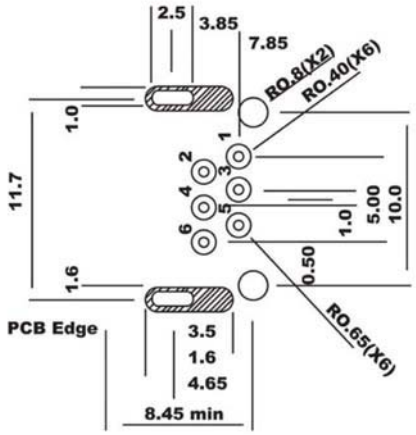

Figure A: PCB Footprint for Receptacle (Through-Hole)

Note:

1. Recommended PC Board Thickness of 1.57mm
2. This allow for a Panel Thickness of 2.67mm maximum, if the receptacle connector 5 mounted behind a panel
3. Recommended PC Board Mounting Dimension: Refer to Figure A
4. Product Numbering Code: A-IE-S-DIP
5. Basic Dimension Established by Customer
6. Product Specification No.: CSP-FWW10-00-00
7. Electrical Characteristics:
7.1 Low Level Contact Resistance: 30 milliohms max.
7.2 Dielectric Withstanding Voltage: 500 VAC
7.3 Insulator Resistance: 100 megohms min
7.4 Contact Current Rating: 1.0 Amp max.
8. Mechanical Characteristics:
8.1 Connector Mating Force: 39.2 Newtons max.
8.2 Connector Unmating Force: 9.8 Newton min
8.3 Durability: 1500 Cycles
8.4 Temperature Range: +15°C to +85°C

RoHS Complaint

Scale	1:1						Name	Item No. **A-IE-S-DIP-R**
TOLERANCE					Drawn	10.24.11	Chappell	
X.X	±0.40				Approved			Title IEEE 1394, for PCB Mounting, Horizontal Version
X.XX	±0.25							
X.XXX	±0.15							Drawing No. rev00
Angle	±3°							
			Modification	Date	Name			Replace / Sheet

ASSMANN WSW components