Copyright FCI.

FCIconnect.com

PRODUCT NUMBER	PITCH
HXxx21x100J0G	3.50 mm

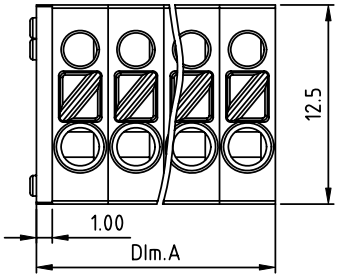

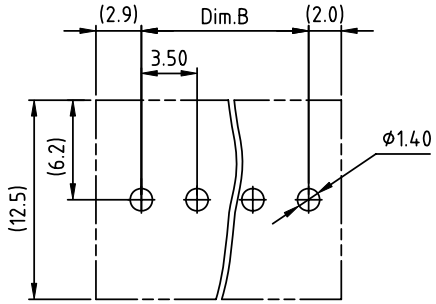

RECOMMENDED P.C.B LAYOUT
TOP VIEW

The color of lever is consistent with body's

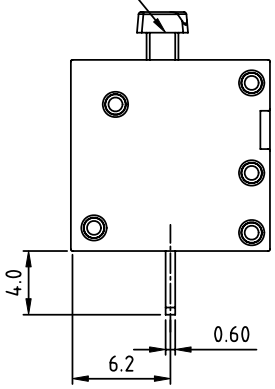

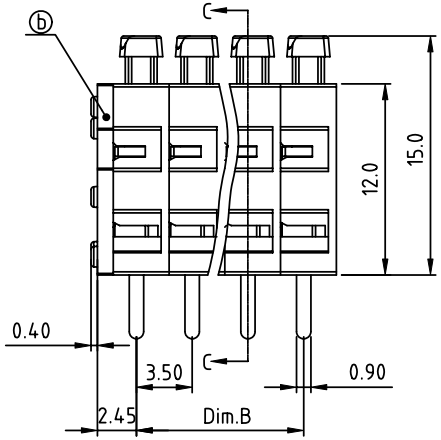

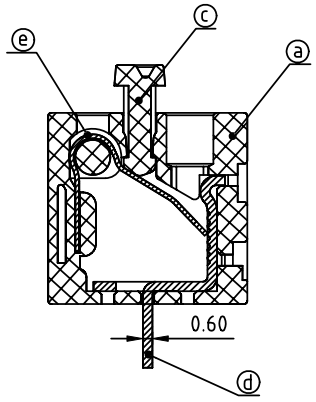

SECTION C-C

Material:

- Item ⓐ Terminal housing: Thermoplastic (UL94V-0)
- Item ⓑ Terminal cover: Thermoplastic (UL94V-0)
- Item ⓒ Lever: Thermoplastic (UL94V-0)
- Item ⓓ Solder pin: Brass, Tin plated
- Item ⓔ Spring clamp: Stainless steel

Electrica cULus

- Voltage rating: AC 300V
- Current rating: 10A
- Wire range:
- Solid wire(AWG): 16-26
- Stranded wire(AWG): 16-26
- Wire strip length: 7-8mm
- Withstanding Voltage: 1.6KV
- Operating temperature: -40°C to +115°C
- Soldering temperature: 260°C±5°C/5 Sec
- Safety Approval: c UL us

N=Number of poles
Dim.A=N×3.5+1.0
Dim.B=(N-1)×3.5

Poles	Dim.A	Dim.B
2-6p	±0.20	±0.15
7-12p	±0.25	±0.20
13-18p	±0.30	±0.25
19-24p	±0.40	±0.30

PART NO.: HX xx 21 x 1 00J0 G

End stackable
No. of poles
02 2 poles
03 3 poles
... ...
24 24 poles

Color
0 Black (RAL9005)
2 Red (RAL3001/D)
3 Orange(RAL2011/P)
4 Yellow(RAL1018/A)
5 Green(RAL6018/T)
6 Blue (RAL5015/A)
8 Grey(RAL7004/P)
9 White(RAL1102)
C Multiple colors

RoHS compliant (lead<4%)
In copper Alloy

mat'l. code				surface ASME Y14.5	tolerance ASME Y14.5	projection	product family TERMINAL BLOCK
ltr	ecn no	dr	date	tolerances unless otherwise specified			title
				angles	linear X.±0.5	MM	TERMINAL BLOCK SPRING CLAMP,90D WIRE INLET SINGLE LINE CONTACT,B TYPE
				X°±1°	X.X±0.3		
					X.XX±0.1	scale	
				dr	EVIN ZHONG 052614	FCI	dwg no HXxx21x100J0G sheet 1 of 1 size A4
				engr	EVIN ZHONG 052614		
				chr	HANKE FENG 052614		
				appd	SHI JUN 052614		type CUSTOMER Drawing
sheet index	revision	A					
	sheet	1					