FILE NO. BHD-CD-801-01

NOTES:

1. MAT'L: COPPER (STOCK THK. .050 ±.001 / 1.27)
   PLATING: ELECTRO TIN (.0003 MIN)
2. TIN-PLATED BRASS FUNNEL FERRULE
3. NYLON INSULATION (COLOR CODED YELLOW)

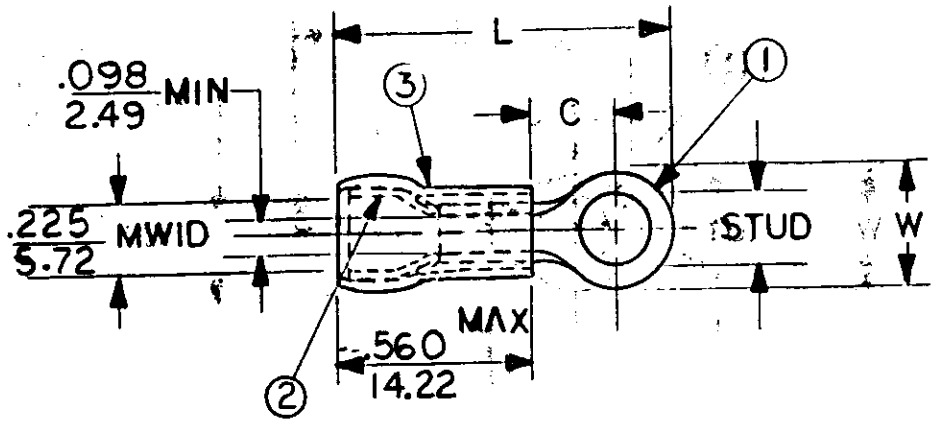

STUD SIZES: (±.005)

02 = .094
04 = .119
06 = .146
08 = .173
10 = .198
14 = .265
56 = .328
38 = .390
76 = .453
12 = .515

"UL" LISTING # E32244
"CSA" LISTING # 18689

WIRE SIZE: 16–14 AWG / 1.0–2.5 MM²

ALL DIMENSIONS = INCHES / MM

(MWID) = DENOTES MAXIMUM WIRE INSULATION DIAMETER

PART NUMBER	"W" ±.010	"C" MIN.	"L" MAX.				AVAILABLE STUD SIZES	
B-801-	.750 / 19.05	.611 / 15.52	1.586 / 40.28				14HD, 56HD, 38HD, 76HD, 12HD	
B-828-	.375 / 9.53	.303 / 7.70	1.091 / 27.71				06HD, 08HD, 10HD	
B-830-	.530 / 13.46	.393 / 9.98	1.258 / 31.95				10HD, 14HD, 56HD	
B-836-	.282 / 7.16	.306 / 7.77	1.047 / 26.59				04HD, 06HD, 08HD	
B-840-	.592 / 15.04	.466 / 11.84	1.362 / 34.59				10HD, 14HD, 56HD, 38HD	

DIMENSIONAL TOLERANCES UNLESS OTHERWISE SPECIFIED			REFERENCE	SCALE: NTS	DATE	TITLE: RING TONGUE HEAVY DUTY TERMINAL AVIKRIMP 800-SERIES	ETC molex INCORPORATED
FRAC.	DEC.	ANG.		DRWN. BY: JJ	11-29-84		
±	±	±		CHKD. BY: GZ	12-13-84		DWG. NO. A CUSTOMER DWG
				APPRD. BY:			