THIS DRAWING IS UNPUBLISHED. RELEASED FOR PUBLICATION 20
© COPYRIGHT 20 BY - ALL RIGHTS RESERVED.

LOC	DIST
FX	00

REVISIONS

P	LTR	DESCRIPTION	DATE	DWN	APVD
	BH	REVISED PER ECO-11-024643	08DEC2011	DLD	WTW
	BJ	REVISED PER ECO-12-010178	05JUN2012	DLD	WTW
	BK	REVISED PER ECO-12-017169	28SEP2012	DLD	WTW

KEYING OPTIONS
SCALE 2:1

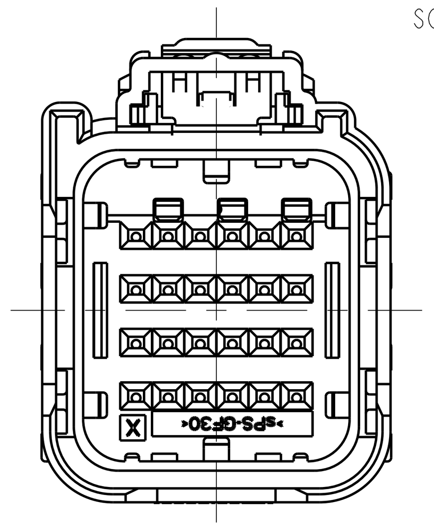

OPTION "A"

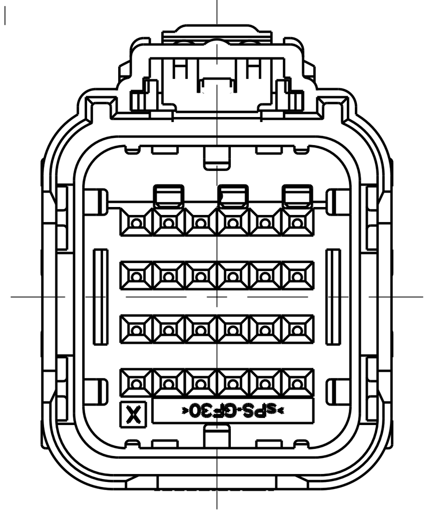

OPTION "B"

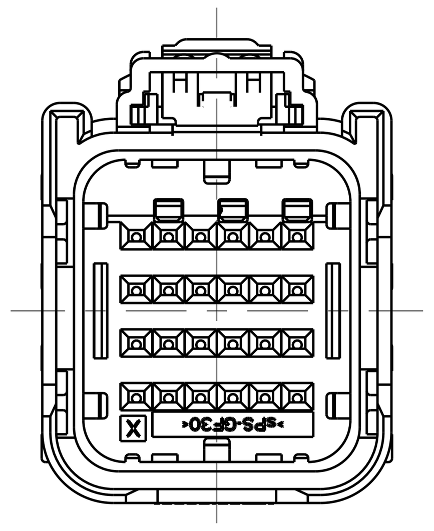

OPTION "C"

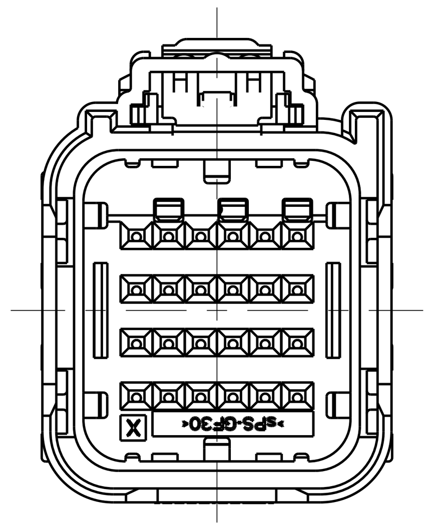

OPTION "D"

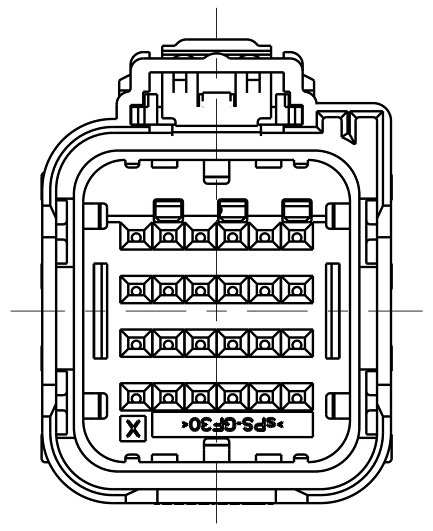

OPTION "E"

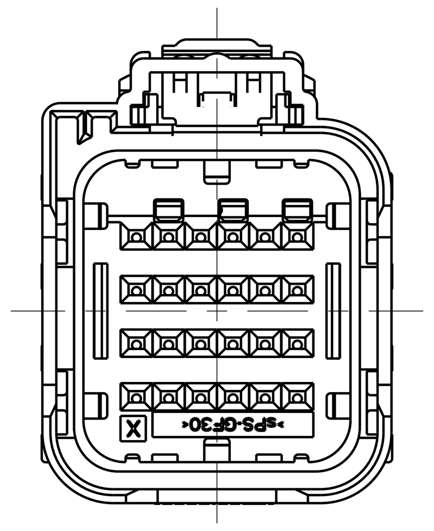

OPTION "F"

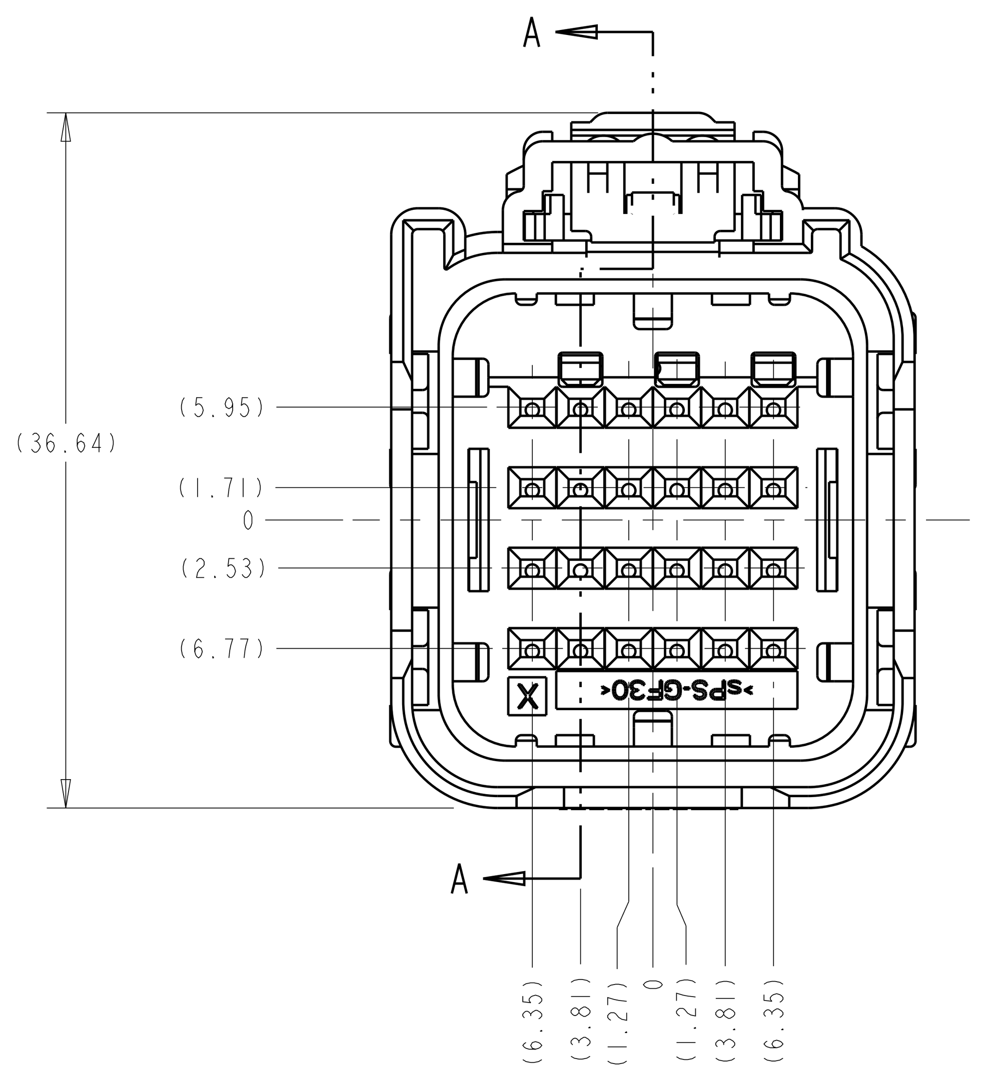

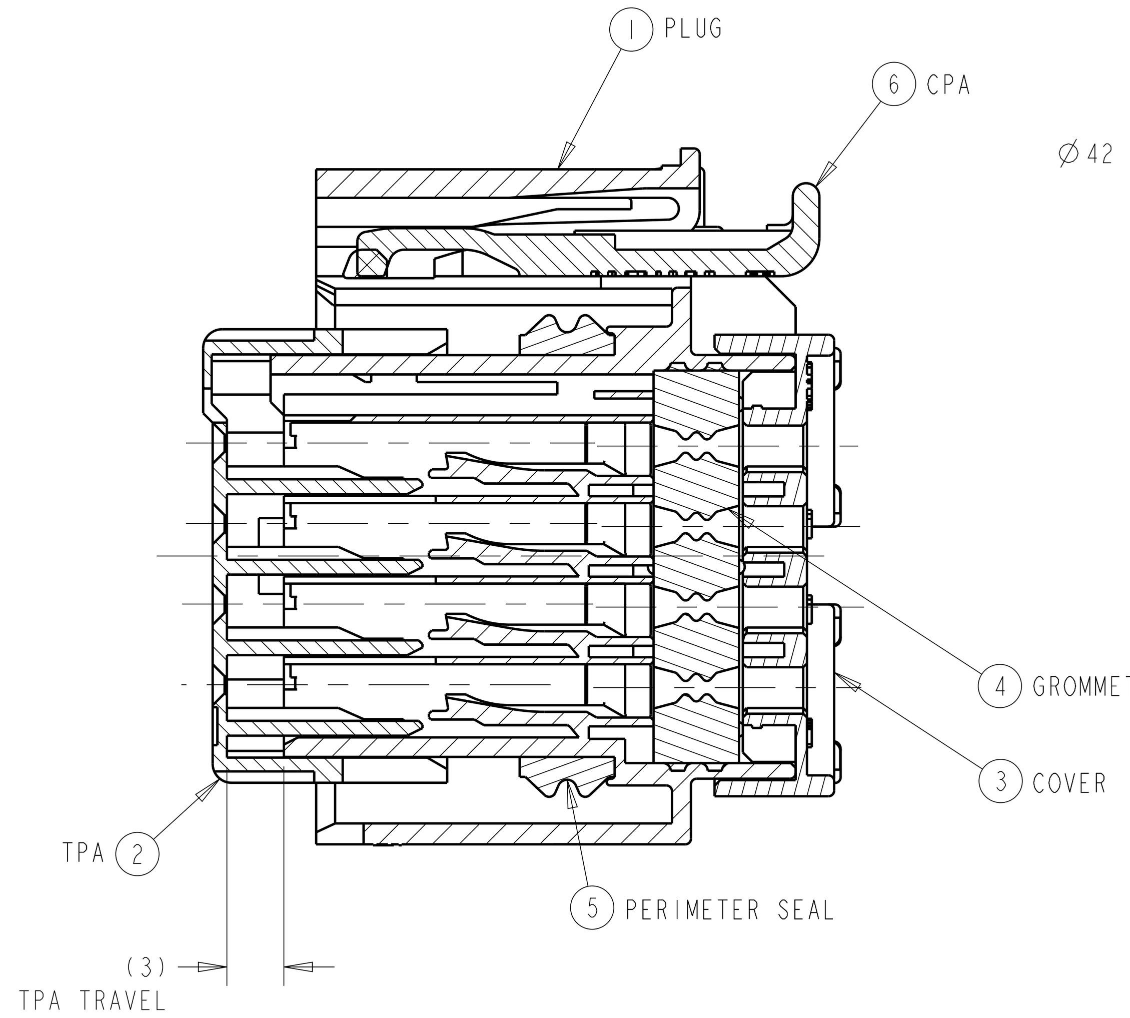

SECTION A-A
SHOWN WITH TPA IN
IT'S PRE-LOADED POSITION
(DELIVERY CONDTION)

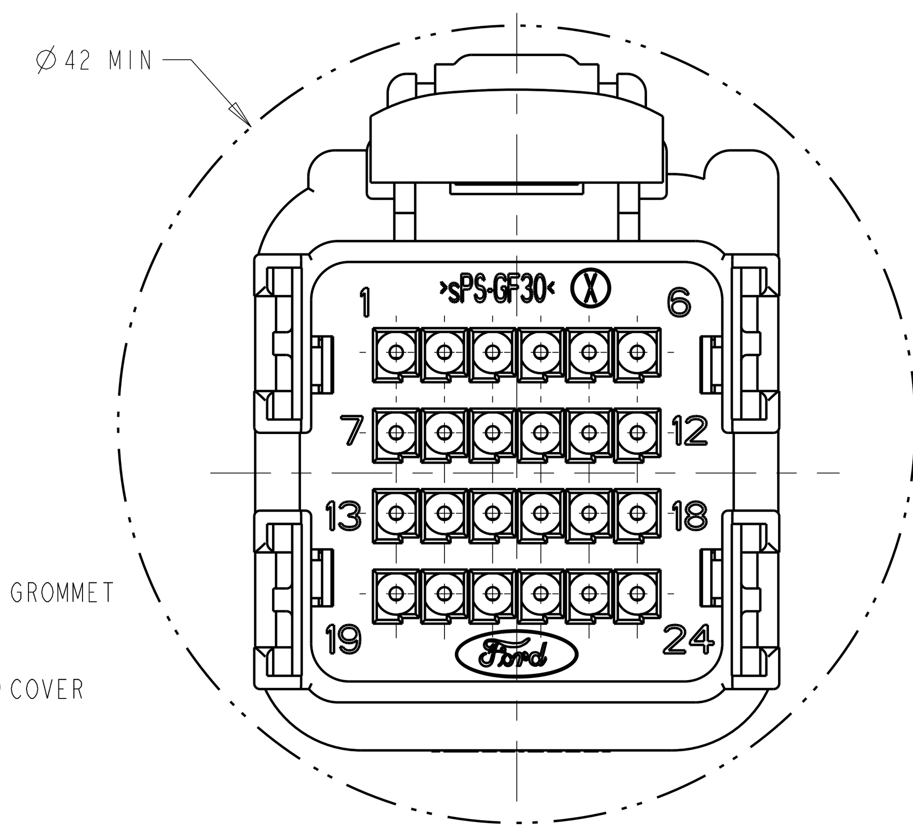

MINIMUM FEED THROUGH CONDITION
WITH 1mm CLEARANCE ALL AROUND

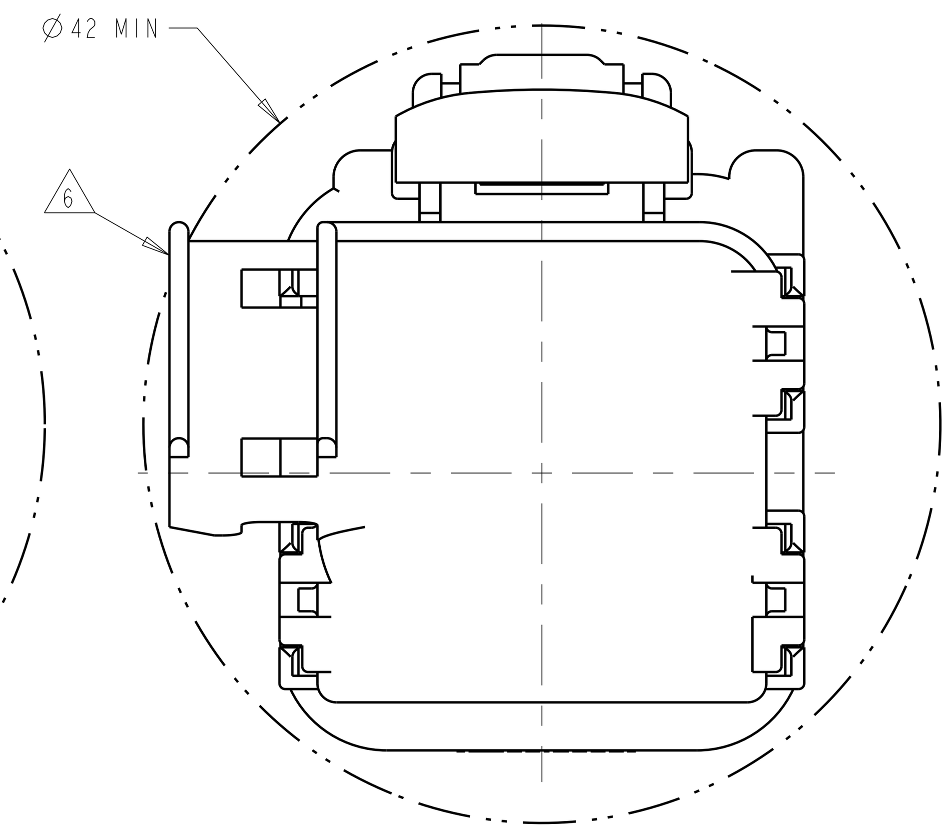

MINIMUM FEED THROUGH CONDITION
WITH 1mm CLEARANCE ALL AROUND
SHOWN WITH OPTION WIRESHIELD

1. APPLICABLE TERMINAL PART NUMBERS (SOLD SEPARATELY):
   FOR TIN APPLICATIONS: 1393367 AND 1393366.
   FOR GOLD APPLICATIONS: 1393365 AND 1393364.
   FOR TERMINATION AND REELING OPTIONS
   SEE DRAWINGS 1393367, 1393366, 1393365, AND 1393364.
2. COMPATIBLE WIRE SIZES FOR MAT SEAL DESIGN 1.19 TO 2.06 O.D.
   (22-18 AWG, 0.35-0.75 mm2)
3. TPA IS SHIPPED IN IT'S PRE-LOADED POSITION. ALL ASSEMBLIES ARE
   TO BE TRAY PACKAGED.
4. (△4) CUSTOMER PART NUMBER AND TRACEABILITY CODE (YY = TWO DIGIT YEAR, JJJ = JULIAN DAY, HH = TWO DIGIT MILITARY HOUR, A = ASSEMBLY PROCESS USED) ARE PRINTED IN THIS LOCATION.
5. PART ASSEMBLY WEIGHT WITHOUT TERMINALS AND WITH STANDARD PIN-OUT CONFIGURATION IS 14.39 GRAMS.
6. (△6) OPTIONAL WIRESHIELD P/N 7-1419157-8 (SOLD SEPARATELY). PLEASE CONTACT YOUR TE SALES REPRESENTATIVE FOR AVAILABILITY AND PRICING.

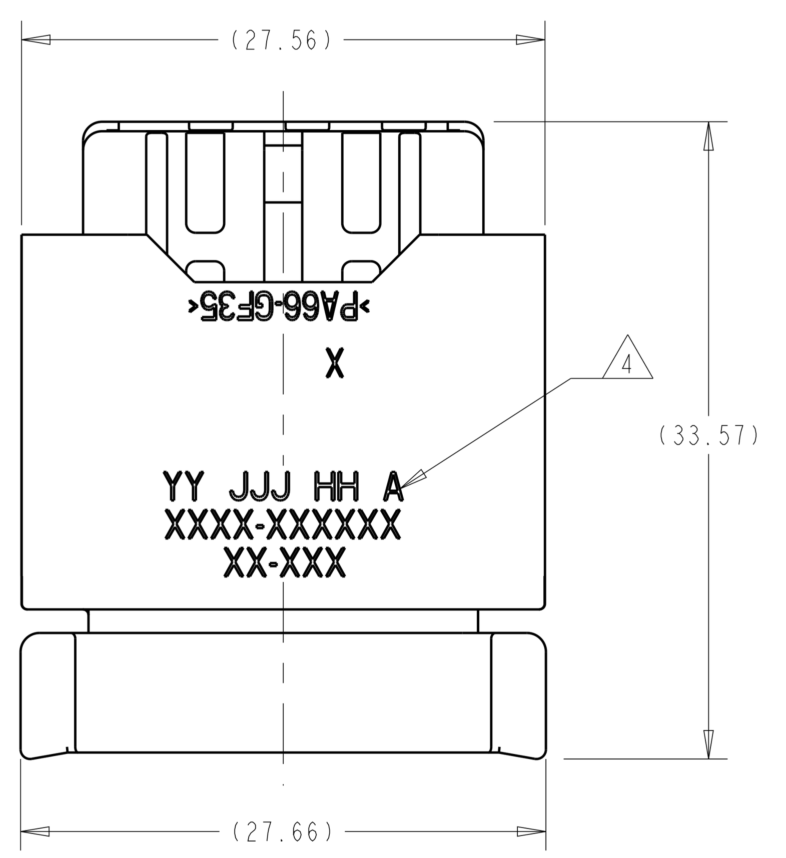

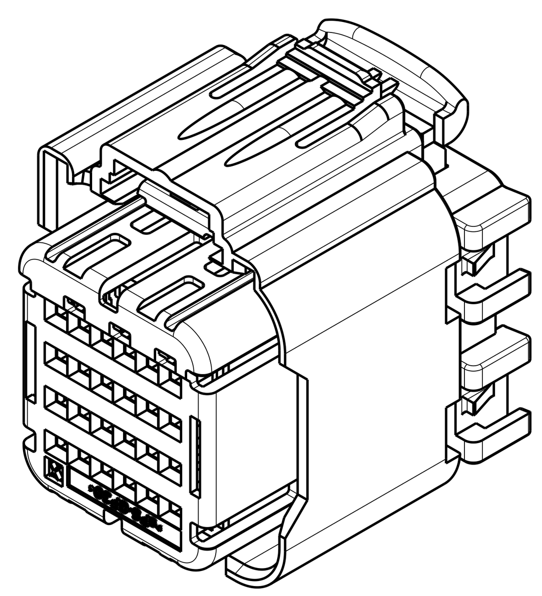

SCALE 2:1

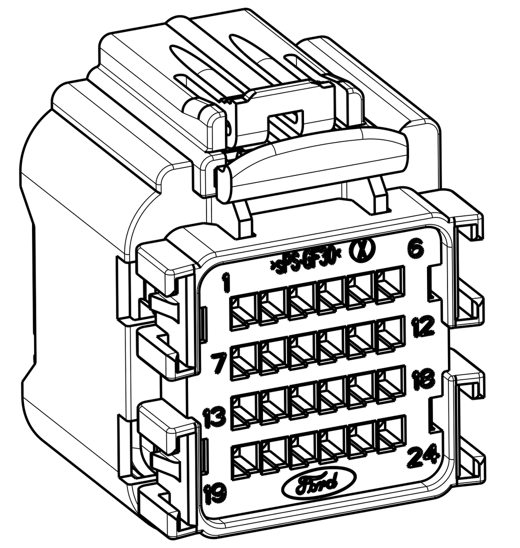

SCALE 2:1

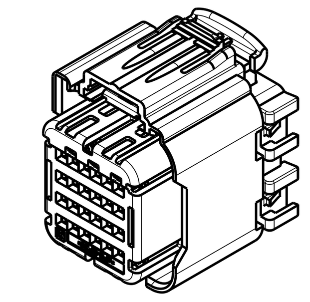

SCALE 1:1

KEYING OPTION "A" SHOWN

ITEM	DESCRIPTION	MATERIAL	FINISH/COLOR
6	CPA	PBT 15% GF	RED
5	PERIMETER SEAL	SILICONE	GREEN
4	GROMMET	SILICONE	BROWN
3	COVER	PA66 35% GF	BLACK
2	TPA WITH 3 SHORTING BAR POSITIONS CONFIGURATION	sPS 30% GF	RED
1	PLUG WITH KEYING OPTION "F" AND 3 SHORTING BAR POSITIONS CONFIGURATION	PA66 35% GF	BLACK
1	PLUG WITH KEYING OPTION "E" AND 3 SHORTING BAR POSITIONS CONFIGURATION	PA66 35% GF	BLACK
1	PLUG WITH KEYING OPTION "D" AND 3 SHORTING BAR POSITIONS CONFIGURATION	PA66 35% GF	BLACK
1	PLUG WITH KEYING OPTION "C" AND 3 SHORTING BAR POSITIONS CONFIGURATION	PA66 35% GF	NATURAL
1	PLUG WITH KEYING OPTION "B" AND 3 SHORTING BAR POSITIONS CONFIGURATION	PA66 35% GF	BLACK
1	PLUG WITH KEYING OPTION "A" AND 3 SHORTING BAR POSITIONS CONFIGURATION	PA66 35% GF	GRAY

ASSEMBLY PART NUMBERS (QUANTITY)

ITEM	1-1438103-7	1-1438103-6	1-1438103-5	1-1438356-2	2-1438095-3	1-1438103-4	1438582-3	1-1438356-1	1-1438096-4	1-1438103-3	1-1438356-0	2-1438095-2	1-1438096-3	1-1438096-2	1-1438096-1	1438583-3	1438583-2	1438583-1	1438582-2	1438582-1	1-1438103-2	2-1438095-1	2-1438095-0	1-1438095-9	1-1438103-1
6 CPA																									
5 PERIMETER SEAL	1	1	1	1	1	1	1	1	1	1	1	1	1	1	1	1	1	1	1	1	1	1	1	1	1
4 GROMMET	1	1	1	1	1	1	1	1	1	1	1	1	1	1	1	1	1	1	1	1	1	1	1	1	1
3 COVER	1	1	1	1	1	1	1	1	1	1	1	1	1	1	1	1	1	1	1	1	1	1	1	1	1
2 TPA	1	1	1	1	1	1	1	1	1	1	1	1	1	1	1	1	1	1	1	1	1	1	1	1	1
1 PLUG "F"																1	1	1							
1 PLUG "E"							1												1	1					
1 PLUG "D"				1				1			1														
1 PLUG "C"									1				1	1	1										
1 PLUG "B"					1							1										1	1	1	
1 PLUG "A"	1	1	1			1				1											1				1

ITEM	1-1438095-8	1-1438095-7	1-1438103-0	2-1438103-0	1438356-9	1438356-8	1438103-9	1-1438095-6	1-1438095-5	1-1438095-4	1438356-7	1438356-6	1438356-5	1438356-4	1-1438095-3	1-1438095-2	1438103-8	1438356-3	1-1438095-1	1438356-2	1438356-1	1-1438096-0	1438096-9	1438096-8	1438096-7
6 CPA																									
5 PERIMETER SEAL	1	1	1	1	1	1	1	1	1	1	1	1	1	1	1	1	1	1	1	1	1	1	1	1	1
4 GROMMET	1	1	1	1	1	1	1	1	1	1	1	1	1	1	1	1	1	1	1	1	1	1	1	1	1
3 COVER	1	1	1	1	1	1	1	1	1	1	1	1	1	1	1	1	1	1	1	1	1	1	1	1	1
2 TPA	1	1	1	1	1	1	1	1	1	1	1	1	1	1	1	1	1	1	1	1	1	1	1	1	1
1 PLUG "F"																									
1 PLUG "E"																									
1 PLUG "D"					1	1					1	1	1	1				1		1	1				
1 PLUG "C"																						1	1	1	1
1 PLUG "B"	1	1						1	1	1					1	1			1						
1 PLUG "A"			1	1			1										1								

ITEM	1438096-6	1438096-5	1438096-4	1438096-3	1438096-2	4-1419171-1	1-1438095-0	1438095-9	1438095-8	1438095-7	1438095-6	1438095-5	1438095-4	1438095-3	1438095-2	4-1419171-0	1438103-7	1438103-6	1438103-5	1438103-4	1438103-3	1438103-2	1438103-1	7-1419157-7	3-1419171-9
6 CPA																									
5 PERIMETER SEAL	1	1	1	1	1	1	1	1	1	1	1	1	1	1	1	1	1	1	1	1	1	1	1	1	1
4 GROMMET	1	1	1	1	1	1	1	1	1	1	1	1	1	1	1	1	1	1	1	1	1	1	1	1	1
3 COVER	1	1	1	1	1	1	1	1	1	1	1	1	1	1	1	1	1	1	1	1	1	1	1	1	1
2 TPA	1	1	1	1	1	1	1	1	1	1	1	1	1	1	1	1	1	1	1	1	1	1	1	1	1
1 PLUG "F"																									
1 PLUG "E"																									
1 PLUG "D"																									
1 PLUG "C"	1	1	1	1	1	1																			
1 PLUG "B"							1	1	1	1	1	1	1	1	1	1									
1 PLUG "A"																	1	1	1	1	1	1	1	1	1

THIS DRAWING IS A CONTROLLED DOCUMENT.

DWN	M. FORISKA 16APR2002
CHK	M. FORISKA 16APR2002
APVD	A. VALASEK 16APR2002
DIMENSIONS:	mm
TOLERANCES UNLESS OTHERWISE SPECIFIED:	0 PLC ±- ; 1 PLC ±0.3 ; 2 PLC ±0.10 ; 3 PLC ±- ; 4 PLC ±- ; ANGLES ±3°
MATERIAL	- SEE CHART ABOVE
FINISH	- -
PRODUCT SPEC	-
APPLICATION SPEC	-
WEIGHT	SEE-NOTE 5

TE Connectivity

NAME: 24 WAY ARM, PLUG ASSEMBLY WITHOUT SHORTING BARS, CUSTOMER SPEC.

SIZE	CAGE CODE	DRAWING NO	RESTRICTED TO
A1	00779	C-3-1419157-9	-

CUSTOMER DRAWING — SCALE 3:1 — SHEET 1 OF 3 — REV BK

4805 (3/11)

THIS DRAWING IS UNPUBLISHED. RELEASED FOR PUBLICATION 20
© COPYRIGHT 20 BY - ALL RIGHTS RESERVED.

LOC	DIST
FX	00

REVISIONS

P	LTR	DESCRIPTION	DATE	DWN	APVD
	-	SEE SHEET 1	-	-	-

ASSEMBLY PART NUMBERS

2098672-1	2035010-2	2035010-1	2035009-3	2035009-2	2035009-1	2035008-3	2035008-2	2035008-1	2035007-2	2035007-1	3-1438103-6	3-1438103-5	3-1438103-4	3-1438103-3	3-1438103-2	3-1438103-1	3-1438103-0	2-1438103-9	2-1438103-8	2-1438103-7	2-1438103-6	2-1438103-5	2-1438103-4	2-1438103-3	2-1438103-2	1-1438356-9	1-1438356-8	1-1438356-7	1-1438356-6	1-1438356-5	1-1438356-4	1438582-5	1438582-4	1-1438096-8	1-1438096-5	1-1438356-3	1-1438103-9	1-1438103-8	ITEM	DESCRIPTION	MATERIAL	FINISH/COLOR
1	1	1	1	1	1	1	1	1	1	1	1	1	1	1	1	1	1	1	1	1	1	1	1	1	1	1	1	1	1	1	1	1	1	1	1	1	1	6	CPA	PBT 15% GF	RED
1	1	1	1	1	1	1	1	1	1	1	1	1	1	1	1	1	1	1	1	1	1	1	1	1	1	1	1	1	1	1	1	1	1	1	1	1	1	5	PERIMETER SEAL	SILICONE	GREEN
1	1	1	1	1	1	1	1	1	1	1	1	1	1	1	1	1	1	1	1	1	1	1	1	1	1	1	1	1	1	1	1	1	1	1	1	1	1	4	GROMMET	SILICONE	BROWN
1	1	1	1	1	1	1	1	1	1	1	1	1	1	1	1	1	1	1	1	1	1	1	1	1	1	1	1	1	1	1	1	1	1	1	1	1	1	3	COVER	PA66 35% GF	BLACK
1	1	1	1	1	1	1	1	1	1	1	1	1	1	1	1	1	1	1	1	1	1	1	1	1	1	1	1	1	1	1	1	1	1	1	1	1	1	2	TPA WITH 3 SHORTING BAR POSITIONS CONFIGURATION	sPS 30% GF	RED
			1	1	1																																	1	PLUG WITH KEYING OPTION "F" AND 3 SHORTING BAR POSITIONS CONFIGURATION	PA66 35% GF	BLACK
		1	1	1	1																											1	1					1	PLUG WITH KEYING OPTION "E" AND 3 SHORTING BAR POSITIONS CONFIGURATION	PA66 35% GF	BLACK
	1	1																								1	1	1	1	1	1				1			1	PLUG WITH KEYING OPTION "D" AND 3 SHORTING BAR POSITIONS CONFIGURATION	PA66 35% GF	BLACK
									1	1																							1	1				1	PLUG WITH KEYING OPTION "C" AND 3 SHORTING BAR POSITIONS CONFIGURATION	PA66 35% GF	NATURAL
																																						1	PLUG WITH KEYING OPTION "B" AND 3 SHORTING BAR POSITIONS CONFIGURATION	PA66 35% GF	BLACK
1						1	1	1			1	1	1	1	1	1	1	1	1	1	1	1	1	1	1											1	1	1	PLUG WITH KEYING OPTION "A" AND 3 SHORTING BAR POSITIONS CONFIGURATION	PA66 35% GF	GRAY
QUANTITY																																						ITEM	DESCRIPTION	MATERIAL	FINISH/COLOR

THIS DRAWING IS A CONTROLLED DOCUMENT.

DIMENSIONS: mm

TOLERANCES UNLESS OTHERWISE SPECIFIED:
0 PLC ±-
1 PLC ±0.3
2 PLC ±0.10
3 PLC ±-
4 PLC ±-
ANGLES ±3°

MATERIAL - SEE CHART ABOVE

FINISH - -

DWN	M. FORISKA	16APR2002
CHK	M. FORISKA	16APR2002
APVD	A. VALASEK	16APR2002

TE Connectivity

NAME: 24 WAY ARM, PLUG ASSEMBLY WITHOUT SHORTING BARS, CUSTOMER SPEC.

PRODUCT SPEC -

APPLICATION SPEC -

WEIGHT -

SIZE	CAGE CODE	DRAWING NO	RESTRICTED TO
A1	00779	C-3-1419157-9	-

CUSTOMER DRAWING

SCALE	SHEET	REV
3:1	2 OF 3	BK

THIS DRAWING IS UNPUBLISHED. RELEASED FOR PUBLICATION 20
© COPYRIGHT 20 BY - ALL RIGHTS RESERVED.

LOC	DIST
FX	00

REVISIONS

P	LTR	DESCRIPTION	DATE	DWN	APVD
	-	SEE SHEET 1	-	-	-

PIN-OUT CHART

1	2	3	4	5	6	7	8	9	10	11	12	13	14	15	16	17	18	19	20	21	22	23	24	TERMINAL HOLE POSITION	ASSEMBLY PART NUMBER	PLUG KEYING OPTION
				5	6					11	12											23			3-1438103-6	KEY "A"
1	2			5	6	7	8			11	12			15	16	17	18			21	22				3-1438103-5	KEY "A"
	2			5	6					11	12	13	14	15			18	19		21	22	23	24		1438582-5	KEY "E"
						7	8										18			21	22				1-1438356-9	KEY "D"
																	18			21	22				1-1438356-8	KEY "D"
	2	3	4																			23			3-1438103-4	KEY "A"
	2	3	4																			23			2035008-3	KEY "A"
						7	8					14								21	22				2098672-1	KEY "A"
				5	6	7	8										18			21	22				1-1438356-7	KEY "D"
1	2			5	6	7	8			11	12			15	16						22				1-1438356-6	KEY "D"
1	2			5	6	7	8			11	12			15	16						22				3-1438103-3	KEY "A"
	2			5	6					11	12	13	14	15			18	19		21	22	23	24		1-1438096-8	KEY "C"
1	2			5	6	7	8			11	12			15						21	22				3-1438103-2	KEY "A"
				5	6																	23			3-1438103-1	KEY "A"
	2			5	6	7	8			11	12	13	14	15			18	19		21	22	23	24		3-1438103-0	KEY "A"
1	2			5	6	7	8	9	10	11	12	13	14	15	16	17	18			21	22	23			2-1438103-9	KEY "A"
1	2	3				7	8	9	10	11		13	14	15	16	17	18	19	20	21	22	23	24		2035010-2	KEY "D"
																									2035010-1	KEY "D"
1						7			10	11		13			16	17	18	19			22	23	24		2035009-3	KEY "F"
1						7			10	11		13			16			19			22				2035009-2	KEY "F"
																									2035009-1	KEY "F"
	2			5	6					11	12	13			16		18						24		2035008-2	KEY "A"
																									2035008-1	KEY "A"
	2			5	6					11	12	13		15	16		18	19			22	23	24		2035007-2	KEY "C"
																									2035007-1	KEY "C"
1	2			5	6	7	8			11	12			15		17	18			21	22	23			2-1438103-8	KEY "A"
	2			5	6					11	12	13		15			18	19			22	23	24		2-1438103-7	KEY "A"
										11	12						18			21	22				2-1438103-6	KEY "A"
										11	12										22				2-1438103-5	KEY "A"
1	2			5	6	7	8			11	12		14	15	16						22	23			1-1438356-5	KEY "D"
1	2			5	6	7	8			11	12		14	15	16						22	23			2-1438103-4	KEY "A"
	2	3	4	5	6						12	13	14	15	16		18	19		21	22	23	24		1438582-4	KEY "E"
				5	6					11	12			15			18			21	22	23			2-1438103-3	KEY "A"
1	2			5	6	7	8			11	12	13	14	15	16	17	18			21	22	23			2-1438103-2	KEY "A"
1	2			5	6	7	8	9	10	11	12			15	16	17	18			21	22	23			1-1438356-4	KEY "D"
1	2			5	6					11	12			15	16						22				1-1438096-5	KEY "C"
1	2			5	6					11	12			15	16						22				1-1438356-3	KEY "D"
																					22				1-1438103-9	KEY "A"
																	18			21	22				1-1438103-8	KEY "A"
1	2			5	6	7	8			11	12	13	14	15	16						22	23			1-1438103-7	KEY "A"
	2			5	6					11	12	13			16		18						24		1-1438103-6	KEY "A"
1	2	3	4	5	6	7	8	9	10	11	12	13	14	15	16	17	18	19	20	21	22	23	24		ASSEMBLY PART NUMBER	PLUG KEYING OPTION

CAVITIES WITH A NUMERIC SYMBOL INDICATE CLOSED TERMINAL HOLE POSITIONS

BLANK CAVITIES INDICATE OPEN TERMINAL HOLE POSITIONS

PIN-OUT CHART

1	2	3	4	5	6	7	8	9	10	11	12	13	14	15	16	17	18	19	20	21	22	23	24	TERMINAL HOLE POSITION	ASSEMBLY PART NUMBER	PLUG KEYING OPTION
1	2	3	4	5		7	8	9	10	11		13	14	15	16	17	18	19	20	21	22	23	24		1-1438103-5	KEY "A"
1	2			5	6	7	8			11	12			15	16	17	18			21	22	23			1-1438356-2	KEY "D"
	2	3	4	5	6						12	13	14	15	16		18	19		21	22	23	24		2-1438095-3	KEY "B"
				4	5	6				10	11	12				16	17	18			22	23	24		1-1438103-4	KEY "A"
1						7			10	11		13			16	17	18	19			22	23	24		1438582-3	KEY "E"
1	2	3				7	8	9	10	11		13	14	15	16	17	18	19	20	21	22	23	24		1-1438356-1	KEY "D"
	2			5	6					11	12	13		15			18	19			22	23	24		1-1438096-4	KEY "C"
	2			5	6					11	12	13	14	15			18	19		21	22	23	24		1-1438103-3	KEY "A"
1	2	3				7			10	11		13			16	17	18	19	20	21	22	23	24		1-1438356-0	KEY "D"
	2	3	4	5	6	7	8				12	13	14	15	16		18	19		21	22	23	24		2-1438095-2	KEY "B"
	2	3	4	5	6						12	13	14	15	16		18	19		21	22	23	24		1-1438096-3	KEY "C"
	2			5	6					11	12	13			16		18						24		1-1438096-2	KEY "C"
	2			5	6					11	12	13		15	16		18	19			22	23	24		1-1438096-1	KEY "C"
1						7			10	11		13			16	17	18	19			22	23	24		1438583-3	KEY "F"
1						7			10	11		13			16			19			22				1438583-2	KEY "F"
																									1438583-1	KEY "F"
1	2	3				7	8	9	10	11		13	14	15	16	17	18	19	20	21	22	23	24		1438582-2	KEY "E"
																									1438582-1	KEY "E"
1	2	3	4	5		7	8	9	10	11		13	14	15		17		19	20	21					1-1438103-2	KEY "A"
	2	3	4	5	6						12	13	14	15	16		18	19			22	23	24		2-1438095-1	KEY "B"
	2	3	4	5	6					11	12		14		16		18						24		2-1438095-0	KEY "B"
	2	3	4	5	6						12	13		15	16		18	19			22	23	24		1-1438095-9	KEY "B"
1						7			10	11		13			16	17	18	19			22	23	24		1-1438103-1	KEY "A"
	2	3	4	5	6					11	12		14		16		18			21			24		1-1438095-8	KEY "B"
					6						12	13	14	15	16		18	19		21	22	23	24		1-1438095-7	KEY "B"
1	2	3	4	5	6	7	8	9	10	11	12	13	14	15	16	17	18	19	20	21	22	23	24		1-1438103-0	KEY "A"
1	2	3				7	8	9				13	14	15		17		19	20	21					2-1438103-0	KEY "A"
																									1438356-9	KEY "D"
1	2			5	6	7	8			11	12			15	16						22	23			1438356-8	KEY "D"
1	2			5	6	7	8			11	12			15	16						22	23			1438103-9	KEY "A"
				5	6						12		14		16		18						24		1-1438095-6	KEY "B"
				5	6						12	13	14	15	16		18	19			22	23	24		1-1438095-5	KEY "B"
				5	6						12	13	14		16		18						24		1-1438095-4	KEY "B"
				5	6					11	12			15	16					21	22	23			1438356-7	KEY "D"
				5	6					11	12			15	16		18			21	22	23			1438356-6	KEY "D"
				5	6					11	12			15	16		18				22	23			1438356-5	KEY "D"
				5	6	7	8	9	10	11	12			15	16	17	18			21	22	23			1438356-4	KEY "D"
				5	6					11	12			15	16		18			21	22	23			1-1438095-3	KEY "B"
				5	6					11	12			15	16						22	23			1-1438095-2	KEY "B"
						7	8			11		13				17	18	19	20	21	22	23	24		1438103-8	KEY "A"
				5	6					11	12										22	23			1438356-3	KEY "D"
1	2	3	4	5	6																	23			1-1438095-1	KEY "B"
1	2	3	4	5	6											16		18				23			1-1438096-0	KEY "C"
1	2	3	4	5	6	7	8	9	10									16				23			1438096-9	KEY "C"
1	2	3	4	5	6																	23			1438096-8	KEY "C"
1	2	3				7	8	9	10	11		13	14	15	16	17	18	19	20	21	22	23	24		1438096-7	KEY "C"
1	2	3	4	5	6											16		18				23			1438096-4	KEY "C"
										11		13					19	20	21		22				1438096-3	KEY "C"
1	2	3	4	5	6												18								1438096-2	KEY "C"
1	2	3	4	5	6											17					22	23			1-1438095-0	KEY "B"
1	2	3	4	5	6											16	17				22	23			1438095-9	KEY "B"
1	2	3	4	5	6												17				22				1438095-8	KEY "B"
1	2	3	4	5	6											16	17				22				1438095-7	KEY "B"
					6					11	12		14		16		18			21			24		1438095-6	KEY "B"
1	2	3	4	5	6																22	23			1438095-5	KEY "B"
	2	3			6	7	8				12	13		15	16		18	19		21	22	23	24		1438095-3	KEY "B"
					6						12	13		15	16		18	19			22	23	24		1438095-4	KEY "B"
1	2	3	4	5	6																22				1438095-2	KEY "B"
				5	6					11	12			15	16						22	23			1438356-2	KEY "D"
				5	6					11	12			15	16		18			21	22	23			1438103-7	KEY "A"
				5	6					11	12			15	16						22	23			1438103-6	KEY "A"
1						7				11		13				17	18	19			22	23	24		1438103-5	KEY "A"
	2	3	4	5	6						12	13	14	15	16		18	19		21	22	23	24		1438103-4	KEY "A"
1						7				11		13						19			22				1438096-5	KEY "C"
																									1438103-3	KEY "A"
1						7			10	11		13			16			19			22				1438103-2	KEY "A"
1	2	3	4	5	6											17									7-1419157-7	KEY "A"
1	2	3				7	8	9		11		13	14	15		17	18	19	20	21	22	23	24		1438096-6	KEY "C"
																									1438103-1	KEY "A"
																									1438356-1	KEY "D"
																									4-1419171-1	KEY "C"
																									4-1419171-0	KEY "B"
																									3-1419171-9	KEY "A"
1	2	3	4	5	6	7	8	9	10	11	12	13	14	15	16	17	18	19	20	21	22	23	24	TERMINAL HOLE POSITION	ASSEMBLY PART NUMBER	PLUG KEYING OPTION

CAVITIES WITH A NUMERIC SYMBOL INDICATE CLOSED TERMINAL HOLE POSITIONS

BLANK CAVITIES INDICATE OPEN TERMINAL HOLE POSITIONS

THIS DRAWING IS A CONTROLLED DOCUMENT.

DIMENSIONS: mm

TOLERANCES UNLESS OTHERWISE SPECIFIED:
0 PLC ±-
1 PLC ±0.3
2 PLC ±0.10
3 PLC ±-
4 PLC ±-
ANGLES ±3°

MATERIAL - SEE CHART ABOVE
FINISH - -

DWN	M. FORISKA	16APR2002
CHK	M. FORISKA	16APR2002
APVD	A. VALASEK	16APR2002

PRODUCT SPEC -
APPLICATION SPEC -
WEIGHT -

TE Connectivity

NAME 24 WAY ARM, PLUG ASSEMBLY WITHOUT SHORTING BARS, CUSTOMER SPEC.

SIZE	CAGE CODE	DRAWING NO	RESTRICTED TO
A1	00779	C-3-1419157-9	-

CUSTOMER DRAWING

SCALE	SHEET	REV
3:1	3 OF 3	BK