DATE	REV	ECN	APP'D. BY
6-28-04	X0	–	–
8-6-04	X1	6510	TRM
1-11-05	A0	6881	TRM
5-10-05	B0	7128	JAF
5-12-05	B1	7131	JAF
1-30-06	B2	7473	JM

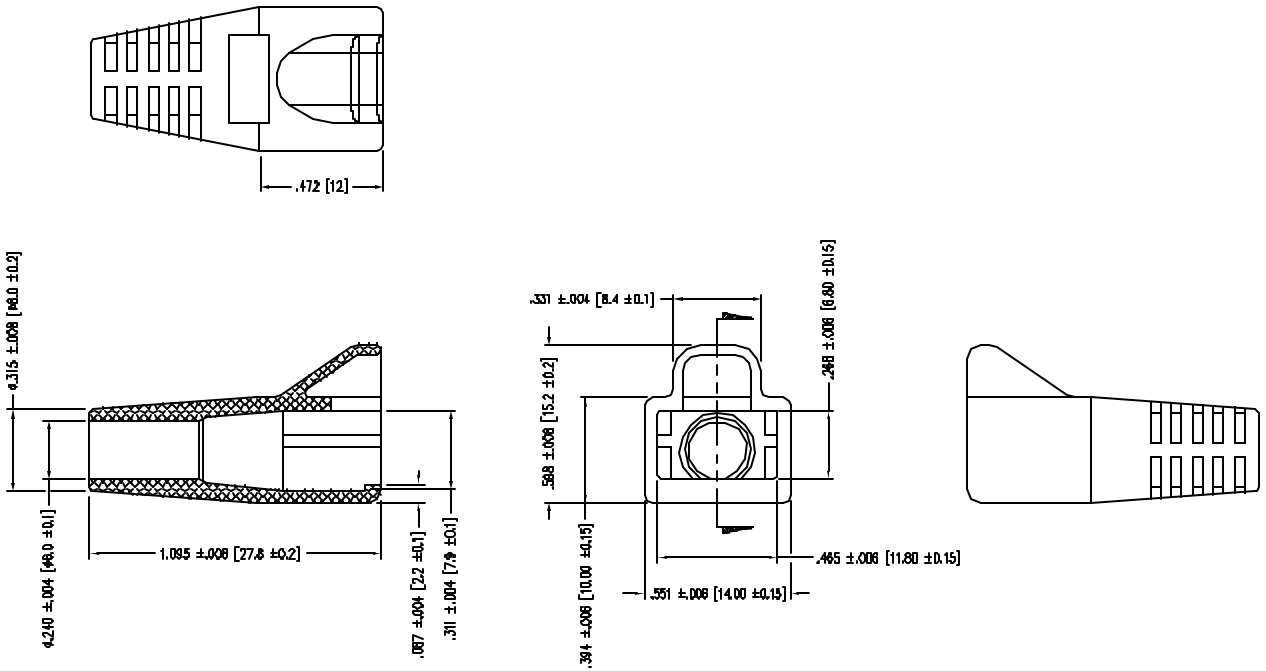

PART NUMBER	COLOR
450-023	YELLOW
450-024	CLEAR
450-025	BLACK
450-026	GREEN
450-027	BLUE
450-028	LIGHT GREY
450-029	DARK GREY
450-030	PURPLE
450-031	WHITE
450-032	RED

MATERIAL: THERMOPLASTIC UL94 V-0

THIRD ANGLE PROJECTION

DO NOT SCALE DRAWING

DRAWING IS SUBJECT TO CHANGE WITHOUT NOTICE

DIMENSIONS: INCHES [METRIC]

UNLESS OTHERWISE SPECIFIED TOLERANCES ARE ±.005 [0.13] ANGLES ARE ± 1°

SHEET NO. 1 OF 1

Bel Stewart Connector

11118 Susquehanna Trail South
Glen Rock, PA 17327-9199
(717) 235-7512 Fax (717) 235-7854 http://www.stewartconnector.com

TITLE: EXTERNAL STRAIN RELIEF BOOT

THIS DRAWING AND THE SUBJECT MATTER SHOWN THEREON ARE CONFIDENTIAL AND THE PROPRIETARY PROPERTY OF BEL STEWART CONNECTOR AND SHALL NOT BE REPRODUCED, COPIED, OR USED IN ANY MANNER WITHOUT PRIOR WRITTEN CONSENT OF BEL STEWART CONNECTOR. THE SUBJECT MATTER MAY BE PATENTED OR A PATENT MAY BE PENDING.

DRN BY:	TRM	DATE	6-28-04
CKD BY:	DHG	DATE	6-29-04
APVD BY:	TRM	DATE	6-29-04
DWG NO.	CT999007	REV.	B2

REV. 7/5/03

AutoCAD