DWG NO.	DO NOT SCALE	METRIC	3rd ANGLE PROJECTION
	DIMENSIONS IN mm.		

REQ. PER ASSY	ITEM	DESCRIPTION	MATERIAL	FINISH

1 of 1

C 881460

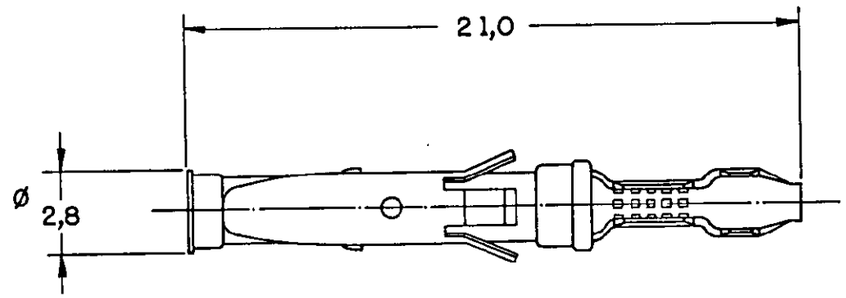

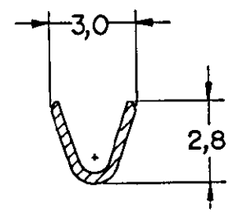

CORTE A-A
SECTION

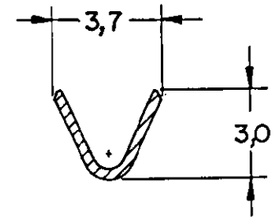

CORTE B-B
SECTION

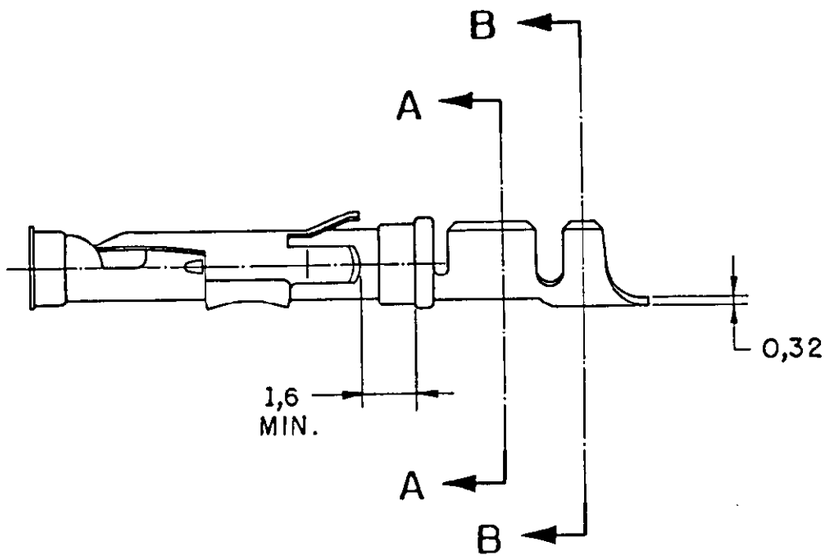

1 - MESMO QUE 163084, EXCETO PELA NÃO EXISTÊNCIA DA IDENTIFICAÇÃO DE CORES.

- SAME AS 163084, BUT WITHOUT COLOUR IDENTIFICATION.

	OURO SELET./SEL. GOLD	↑	↑ -2
	ESTANHADO/TIN	LATÃO / BRASS	881460 -1
	FINISH	MATERIAL	PART NUMBER

CUSTOMER DWG
for REFERENCE ONLY

ISS	REVISION RECORD	ECN	DR/CHK	DATE
A	REDESENHADO S/ MODIF.	363-95	NCL 7	10AUG95

THIS DRAWING IS UNPUBLISHED | RELEASED FOR PUBLICATION ,19 ,

© COPYRIGHT 19 BY AMP DO BRASIL LTDA S.P. ALL INTERNATIONAL RIGHTS RESERVED AMP PRODUCTS MAY BE COVERED BY U.S. AND FOREIGN PATENTS AND/OR PATENTS PENDING.

TOLERANCES UNLESS OTHERWISE STATED
DEC. ± 0,3
ANGLES ± 1°

INS. DIA. RANGE	WIRE RANGE	SCALE
2,0 – 2,5 mm	0,75 – 1,50 mm²	—

DR. N.C. LAPRESA 07 - AUG. - 95
CHK. 10 - AUG - 95 J.R. Holoschmidt
DE. 11 - AUG. 95 Gemello
APP. 11 AUG 95 R. INDRIKSONS

AMP
AMP do BRASIL LTDA.
São Paulo, Brasil

DESCRIPTION SOCKET TYPE III CONTACT SIZE 16

A3 | DWG NO. C 881460 | SHEET 1 OF 1