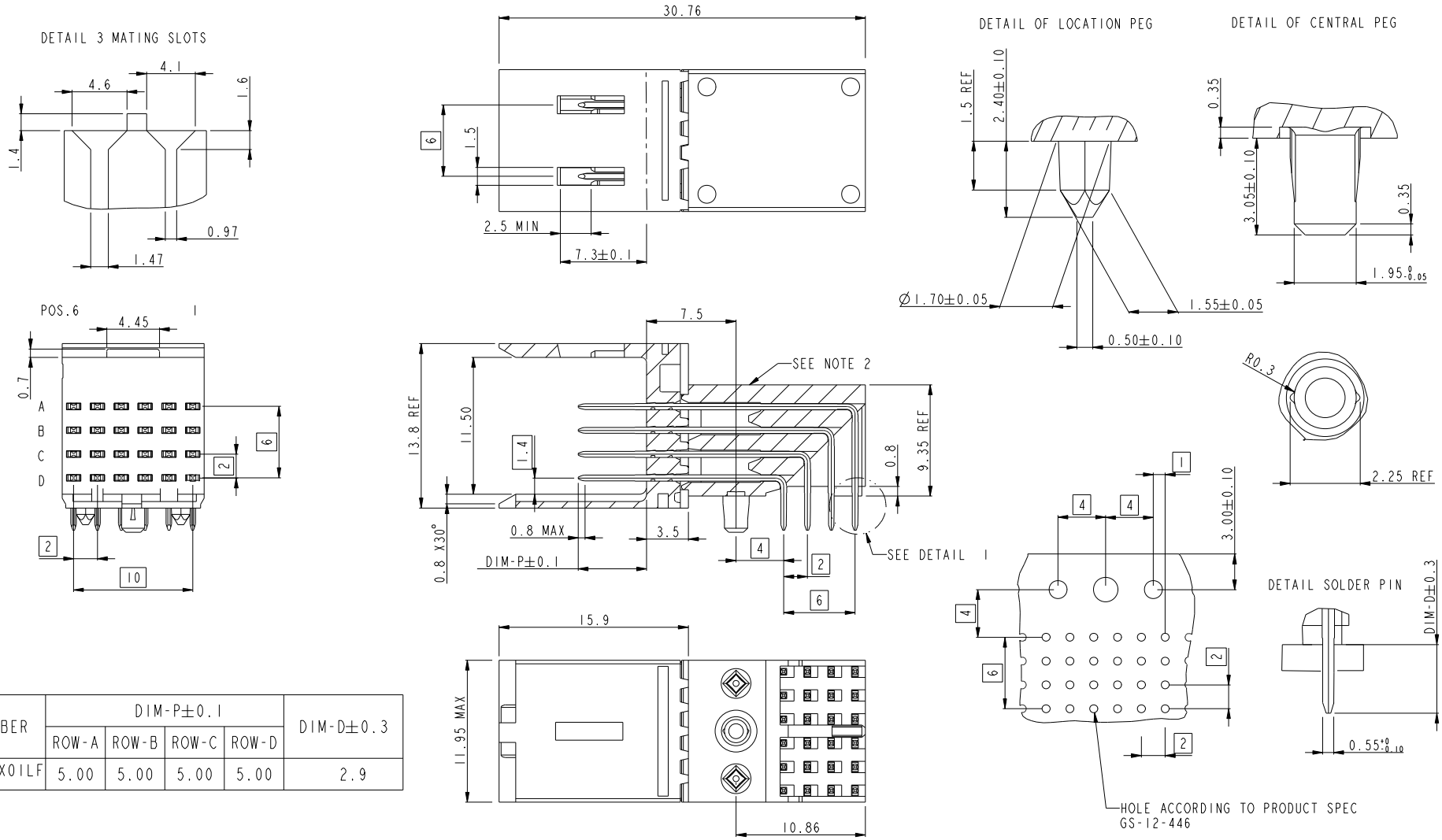

PART NUMBER	DIM-P±0.1				DIM-D±0.3
	ROW-A	ROW-B	ROW-C	ROW-D	
10101826-X01LF	5.00	5.00	5.00	5.00	2.9

NOTE 1: GENERAL CHARACTERISTICS ACCORDING TO GS-12-446
NOTE 2: ONE CENTER PEG FOR HOLD DOWN FORCE
NOTE 3: REAR END SUPPORT FOR BETTER ASSY ON PCB
NOTE 4: STANDARD PACKAGING IS TUBE
MARKING 10101826-1XXLF
NOTE 5: SPECIFIC REQUIREMNT DESIGNATIONS, FOR THE ROW AND COLUMN DESIGNATION MARKING ROTATED 180 DEGREES

rev	ecn no	dr	date
A	DG09-0264	Cenh	05/23/09
B	DG09-0326	Cenh	06/22/09
-	-	-	-
-	-	-	-
-	-	-	-
-	-	-	-
-	-	-	-

www.fciconnect.com

surface ✓ | tolerance std | projection | MM

TOLERANCES UNLESS OTHERWISE SPECIFIED

Dr	Heaven Cen	5/23/09	ANGULAR	LINEAR	0.X	± 0.3
Eng	Heaven Cen	5/23/09			0.XX	± 0.10
Chr	PM Zheng	5/23/09	0° ± °		0.XXX	± 0.050
Appr	Joseph Hsia	5/23/09	Product family		Metral	

size A3 | Scale 1.414 | ECN | Spec ref

title: METRAL RA HDR NB STB WITH FRONT HOUSING ROTATED 180 DEGREES

dwg no: 10101826 | Rev. B

catalog no | CUSTOMER | sheet 1 of 1

Copyright FCI.

REV F - 2006-04-17

PDM: Rev:B STATUS:Released Printed: Dec 12, 2009