DATE	REV	ECN	APP'D. BY
6/21/12	A3	9519	SMN
8-23-12	A4	9585	TRM
1-19-15	A5	10212	TRM

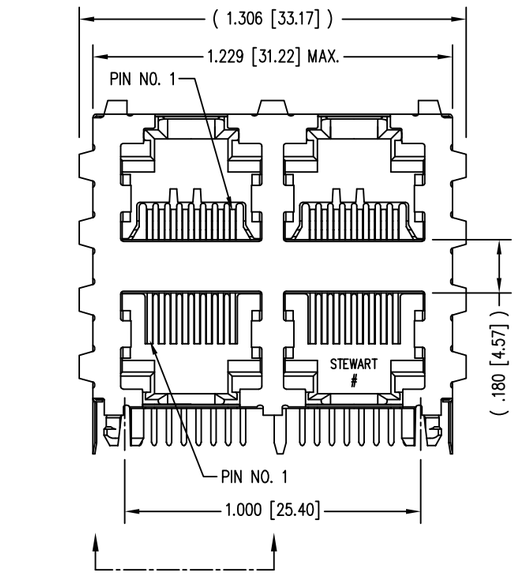

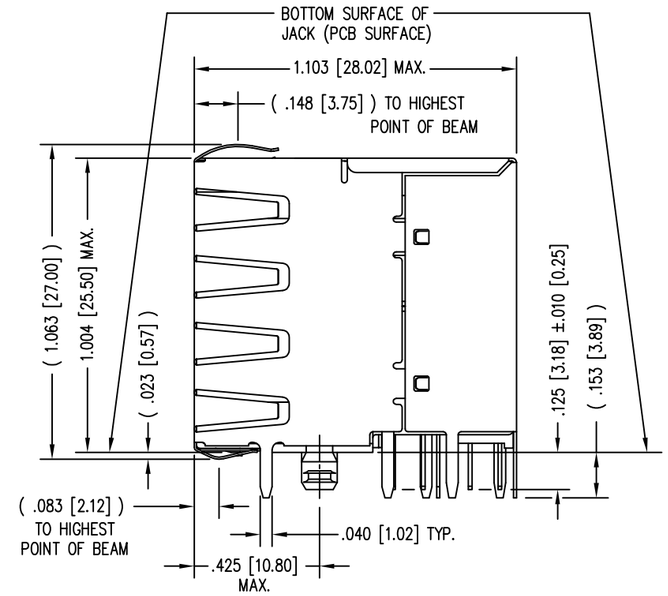

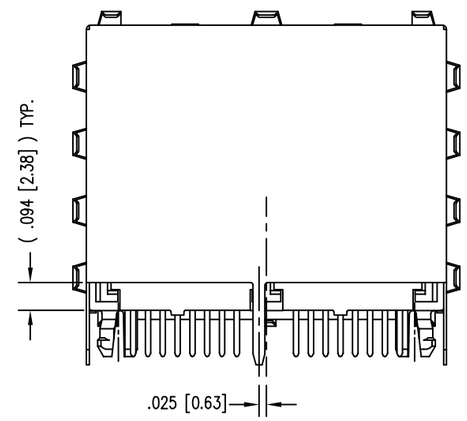

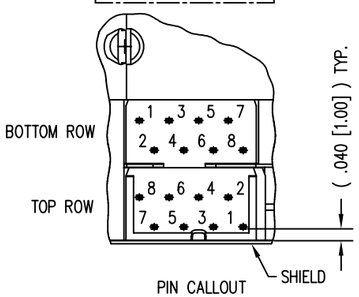

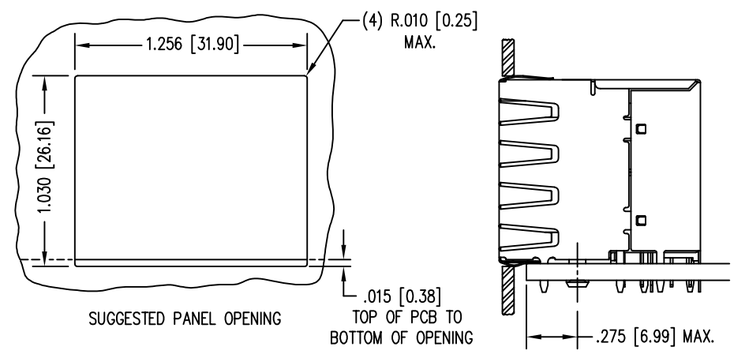

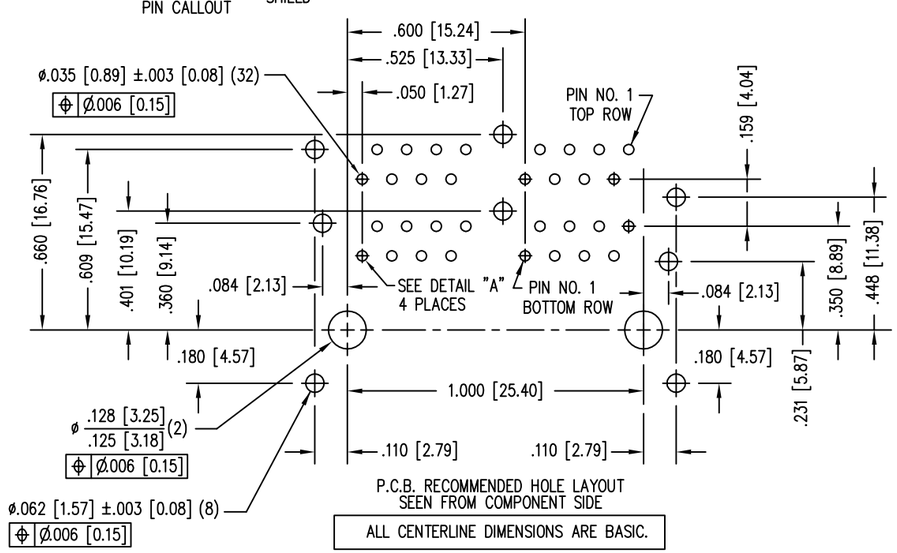

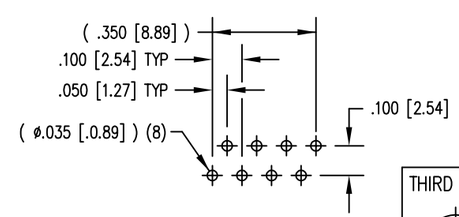

NOTES:

1. CONNECTOR MATERIALS:
   HOUSING: THERMOPLASTIC UL94 V-0
   CONTACTS/SHIELD: COPPER ALLOY
   SHIELD PLATING: NICKEL OR TIN
   CONTACT PLATING: SELECTIVE GOLD IN CONTACT AREA
   SEE CHART FOR PART NUMBER
2. FOR PRODUCT SPECIFICATIONS SEE PR022-01.
3. DIMENSIONS AND TOLERANCES COMPLY WITH TIA-1096 STANDARD.
4. THE SUGGESTED PANEL OPENING IS INTENDED TO GIVE USER THE ABILITY TO HAVE REASONABLE JACK/PANEL CLEARANCES, YET MAINTAIN GROUNDING CAPABILITY. THESE VARIABLES CAN BE ADJUSTED IN EITHER DIRECTION BUT MAY CARRY SOME CONSEQUENCES IN THE FORM OF **LOWER MATING FORCES OR TIGHTER ASSEMBLY TOLERANCES.**
5. CONNECTOR LUBRICANT APPLIED TO CONTACTS WITH FORWARD FACING GEOMETRY.

50 MICRO-INCHES [1.27um]	SS-7388H22S-PG4-AC-50
CONTACT PLATING IN MATING AREA	PART NUMBER

THIRD ANGLE PROJECTION

DO NOT SCALE DRAWING

DRAWING IS SUBJECT TO CHANGE WITHOUT NOTICE

DIMENSIONS: INCHES [METRIC]

UNLESS OTHERWISE SPECIFIED TOLERANCES ARE ±.005 [0.13] ANGLES ARE ± 1°

SHEET NO. 1 OF 1

RoHS

stewart CONNECTOR a bel group
11118 Susquehanna Trail South
Glen Rock, PA 17327-9199
(717) 235-7512
http://www.stewartconnector.com

TITLE: EIGHT CONTACT, EIGHT POSTION
SHIELDED STACKED HARMONICA JACK, 4 PORTS (2 ON 2)

THIS DRAWING AND THE SUBJECT MATTER SHOWN THEREON ARE CONFIDENTIAL AND THE PROPRIETARY PROPERTY OF STEWART CONNECTOR AND SHALL NOT BE REPRODUCED, COPIED, OR USED IN ANY MANNER WITHOUT PRIOR WRITTEN CONSENT OF STEWART CONNECTOR. THIS PRODUCT MAY BE PROTECTED BY ONE OR MORE OF THE FOLLOWING US PATENTS: 5791942 6217391 6368159 6419526 6602097 687722 6964587 7048590 7086909 7568950 7686650 OTHER PATENTS MAY BE PENDING.

DRN BY:	KRL	DATE	2/3/06
APPD BY:	TRM	DATE	5-24-06
DWG NO.	CT730102	REV.	A5

REV. 6/3/05

AutoCAD