CUSTOMER DRAWING

NUMBER 368121

3rd ANGLE PROJECTION

METRIC

DIMENTIONS IN MM. DO NOT SCALE PRINT

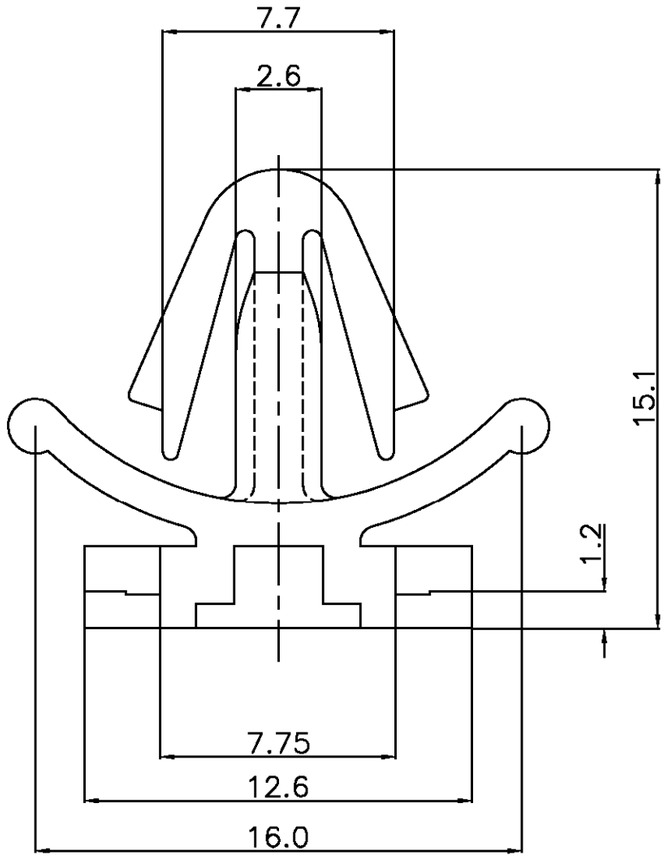

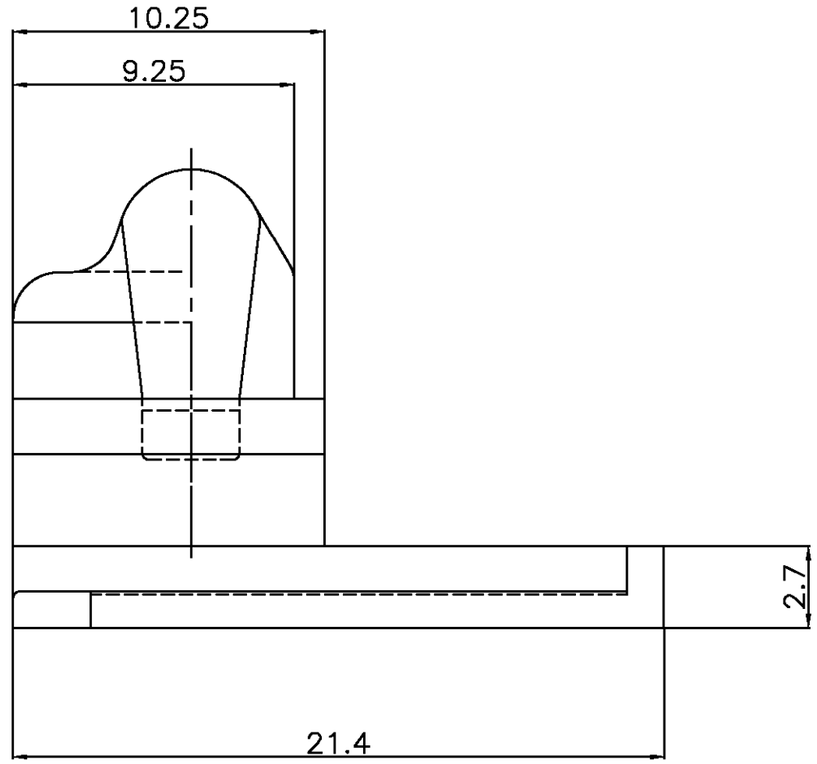

PANEL HOLE SIZE

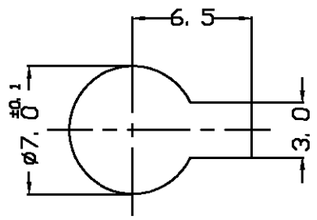

PANEL THICKNESS: 0.7-1.6mm

BLACK	368121-1
COLOR	PART NO.

LTR	REVISION RECORD	DR	CHK	DATE
0	RELEASED(RD96-380)	TD	CS	97DEC.4

COLOR	NAME	P/N
BLACK	CLIP HSG FOR 070 & EJ	368121-1

© 19 AMP MFG KOREA
ALL RIGHT RESERVED AMP PRODUCTS COVERED BY PATENTS
AND OR PATENTS PENDING

AMP MFG KOREA

WIRE RANGE	INSULATION DIA
MATERIAL: NYLON 66	FINISH/COLOR: SEE TABLE
DR	APP
CHK	REL

NAME: CLIP HSG FOR 070 & EJ

TOLERANCES
0<XX<10 ±0.2
10<XX<30 ±0.25
30<XX<100±0.3
ANGLES ±3°

SIZE	LOC	NUMBER
A3	DS	368121

SCALE	REV	SHEET
5/1	0	1 OF 1

PRINT DIST.