FCIconnect.com

PRODUCT NUMBER	PITCH
0Qxx3500D0J0G	3.81 mm

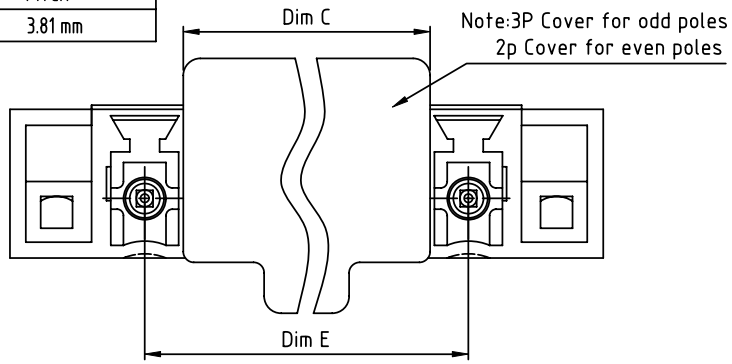

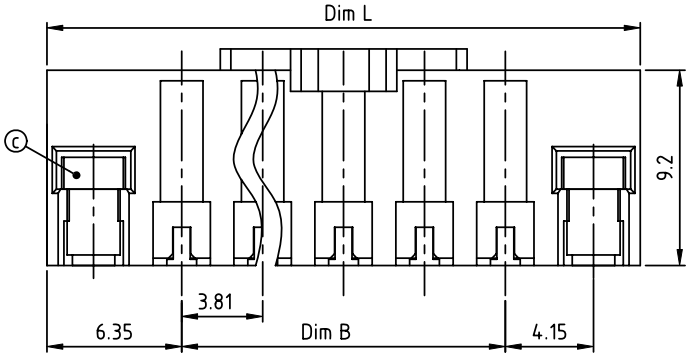

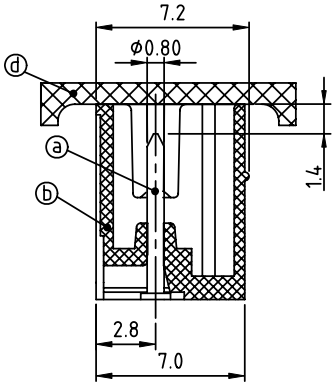

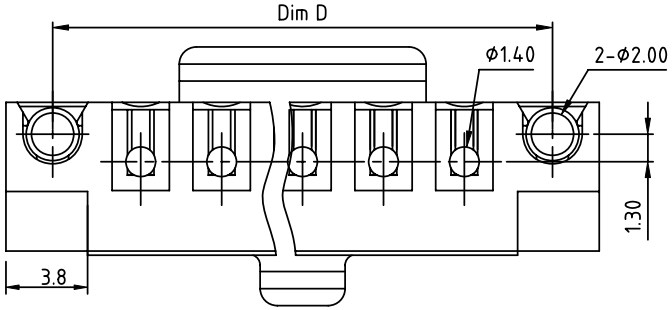

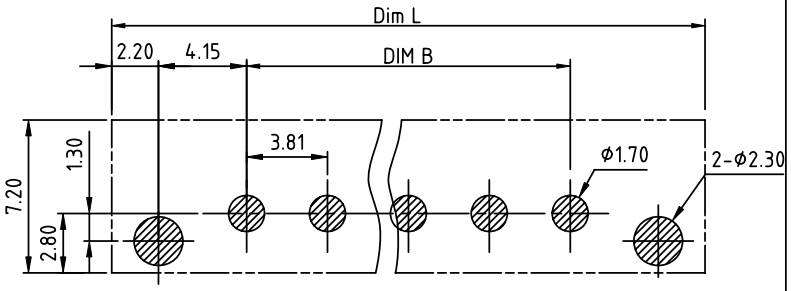

RECOMMENTED P.C.B LAYOUT
TOP VIEW

Material:
- Item ⓐ Pin: Brass,Tin plated
- Item ⓑ Terminalhousing):High temp. polyamide (UL94V-0)
- Item ⓒ With flange stud: Brass,Tin plated
- Item ⓓ With cover: High temp. polyamide(UL94V-0)

Electrical:	cULus
Voltage rating:	150V
Current rating:	8A
Withstanding Voltage:	1.3 KV
Operating temperature:	-40°C to +65°C
Reflow soldering temperature:	260°C/10 Sec max

Cover

Poles	Dim C
2P	7.81
3P	11.62

N=Number of poles

Dim L	(N-1)×3.81+12.7
Dim B	(N-1)×3.81
Dim D	(N-1)×3.81+8.3
Dim E	(N-1)×3.81

Poles	Tolerance
2p-6p	±0.15
7p-12p	±0.20
13p-16p	±0.30

PART NO.: OQ xx 3 5 0 0 D0J0 G

- Solid block
- No. of poles
  - 02 2 poles
  - 03 3 poles
  - ... ...
  - 16 16 poles
- 0 Color Black (RAL9005)
- RoHS compliant (lead<4%) In copper Alloy

mat'l. code				surface ASME Y14.5	tolerance ASME Y14.5	projection	product family TERMINAL BLOCK
ltr	ecn no	dr	date	tolerances unless otherwise specified			title
				angles	linear X.±0.5 / X.X±0.3 / X.XX±0.1	MM	TERMINAL BLOCK PLUGGABLE SOCKET,VERTICAL,SMT
				X°±1°		scale	
				dr	EVIN ZHONG 051314		dwg no 0Qxx3500D0J0G — sheet 1 of 1 — size A4
				engr	EVIN ZHONG 051314		
				chr	HANKE FENG 051314		
				appd	SHI JUN 051314		type CUSTOMER Drawing
sheet index	revision	A					
	sheet	1					