THIS DRAWING IS UNPUBLISHED. RELEASED FOR PUBLICATION -,- .
© COPYRIGHT - By - ALL RIGHTS RESERVED.

LOC	DIST
AJ	16

REVISIONS

P	LTR	DESCRIPTION	DATE	DWN	APVD
	AF2	REVISED PER ECO-11-005030	11MAR11	RK	HMR

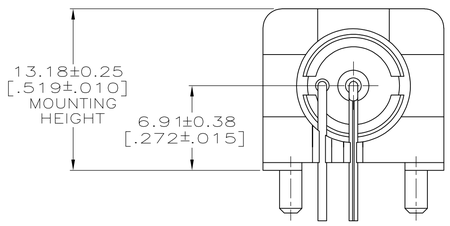

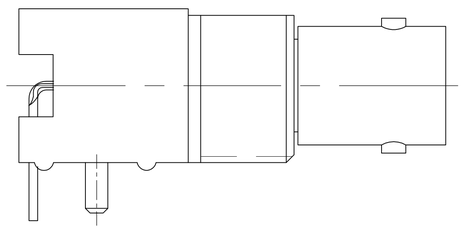

VIEW C
(SAME AS VIEW A
EXCEPT AS SHOWN)

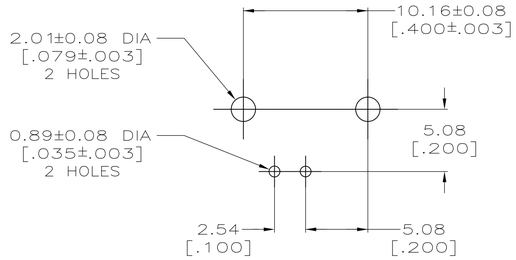

PCB CONFIGURATION

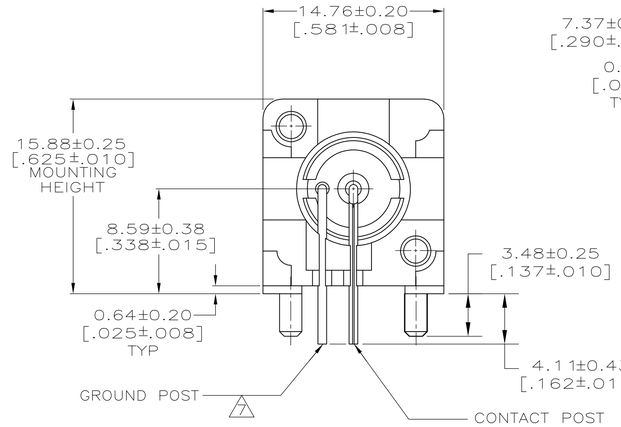

VIEW A

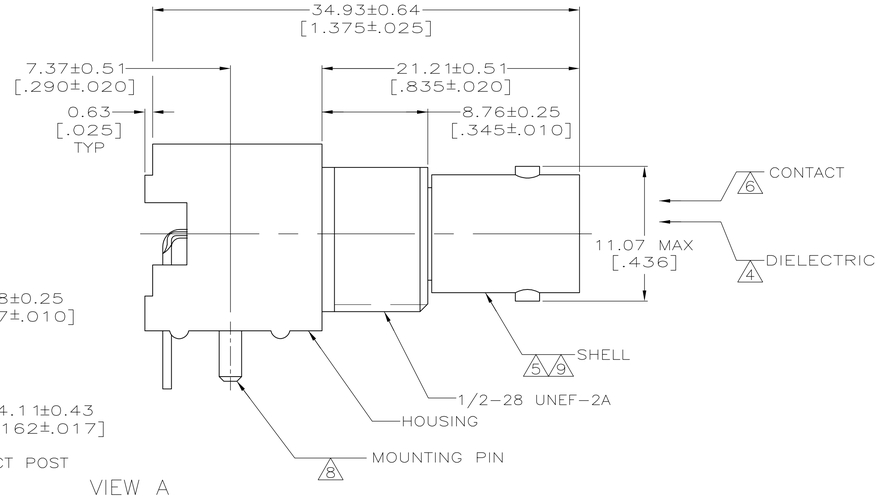

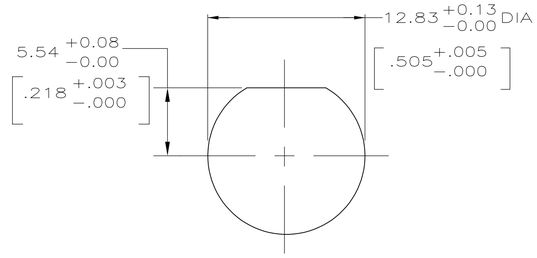

RECOMMENDED PANEL CUTOUT

1. POLYESTER PBT PER MIL-M-24519, TYPE GPT-15F, UL94V-O RATED, COLOR:WHITE
2. POLYESTER PBT PER MIL-M-24519, TYPE GPT-15F, UL94V-O RATED, COLOR:BLACK
3. POLYESTER PCT GENERAL PURPOSE, 30% GLASS FILLED, UL94V-O RATED, COLOR:GRAY
4. POLYMETHYLPENTENE, GENERAL PURPOSE.
5. ZINC PER QQ-Z-363.
6. PHOSPHOR BRONZE PER QQ-B-750.
7. BRASS PER ASTM-B-453.
8. BRASS PER ASTM-B-16.
9. NICKEL PLATE PER QQ-N-290, 3.81 μm [.000150] MINIMUM THICK.
10. TIN PLATE PER ASTM-B-545. 3.81 μm [.000150] MINIMUM THICK.
11. GOLD PLATE PER MIL-G-45204, 0.76 μm [.000030] MINIMUM THICK.
12. GOLD PLATE PER MIL-G-45204, 1.27 μm [.000050] MINIMUM THICK.
13. SILVER PLATE PER QQ-S-365, 2.54 μm [.000100] MINIMUM THICK.
14. TIN PLATE PER ASTM-B-545, 3.81 μm [.000150] MINIMUM THICK.
15. SEE INSTRUCTION SHEET 2769.
16. OBSOLETE PARTS: OBSOLETE CIS STREAMLINING PER D.RENAUD/D.SINISI

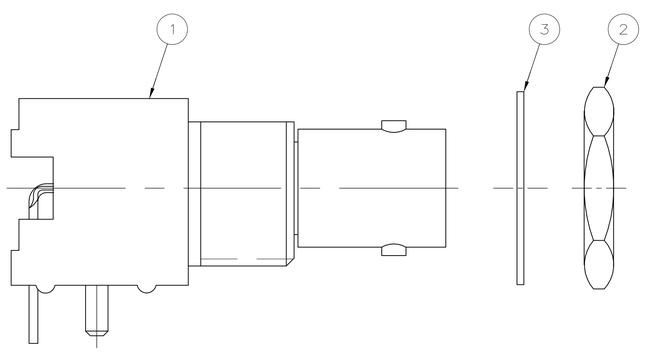

VIEW B

	MOUNTING PIN PLATING	GROUND POST PLATING	CONTACT POST PLATING	CONTACT FINISH	HOUSING MATERIAL	VIEW 3 LOCKWASHER	VIEW 2 JAM NUT QTY=1	VIEW 1 ASSEMBLY QTY=1	PART NUMBER
SUPERSEDED BY 5227161-2	14	14	14	14	2	A	–	–	–	9-227161-1
SUPERSEDED BY 5227161-1	14	14	14	14	1	A	–	–	–	9-227161-0
16 SUPERSEDED BY 1-5227161-7	10	10	10	–	–	B	1-329632-2	1-329631-2	227161-9	1-227161-7
16 SUPERSEDED BY 1-5227161-6	10	10	10	–	–	B	1-329632-2	1-329631-2	227161-6	1-227161-6
OBSOLETE	10	10	10	12	1	A	–	–	–	1-227161-4
SUPSD BY 415218-5 OR 415218-6	10	10	10	11	3	C	–	–	–	1-227161-3
SUPERSEDED BY 227161-7	10	10	10	–	–	B	1-329632-2	1-329631-2	1-227161-1	1-227161-2
SUPERSEDED BY 227161-7	10	10	10	11	1	C	–	–	–	1-227161-1
OBSOLETE	10	10	10	–	–	B	1-329632-2	1-329631-2	227161-3	1-227161-0
	10	10	10	11	2	C	–	–	–	227161-9
SUPERSEDED BY 227161-7	10	10	10	–	–	B	1-329632-2	1-329631-2	227161-7	227161-8
	10	10	10	11	1	C	–	–	–	227161-7
	10	10	10	11	2	A	–	–	–	227161-6
SUPERSEDED BY 227161-3	10	10	10	13	1	A	–	–	–	227161-5
SUPERSEDED BY 227161-6	10	10	10	13	2	A	–	–	–	227161-4
	10	10	10	11	1	A	–	–	–	227161-3
	10	10	10	10	2	A	–	–	–	227161-2
	10	10	10	10	1	A	–	–	–	227161-1

THIS DRAWING IS A CONTROLLED DOCUMENT.

DIMENSIONS: INCHES

TOLERANCES UNLESS OTHERWISE SPECIFIED:
0 PLC ± –
1 PLC ± –
2 PLC ± 0.05 [.002]
3 PLC ± –
4 PLC ± –
ANGLES ± –

MATERIAL 1 2 3 4 5 6 7 8
FINISH 9 10 11 12 13 14

DWN J. LIPPERT 5-2-91
CHK M. E. COWHER 5-6-91
APVD J. LIPPERT 05-09-91
PRODUCT SPEC 108-12078
APPLICATION SPEC –
WEIGHT –
CUSTOMER DRAWING

TE Connectivity

NAME: JACK, RIGHT ANGLE, 50 OHM, PCB, BNC

SIZE	CAGE CODE	DRAWING NO	RESTRICTED TO
A1	00779	C-227161	–

SCALE 4:1 SHEET 1 OF 1 REV AF2