DRAWING MADE IN THIRD ANGLE PROJECTION

THIS DRAWING IS UNPUBLISHED. RELEASED FOR PUBLICATION ,19 .
© COPYRIGHT 19 BY AMP INCORPORATED. ALL INTERNATIONAL RIGHTS RESERVED.

LOC	DIST
G	86

P	F	ZONE	LTR	DESCRIPTION	DATE	APPD
			L	REV PER 0G3A-0561-02	09OCT02	JR/MS

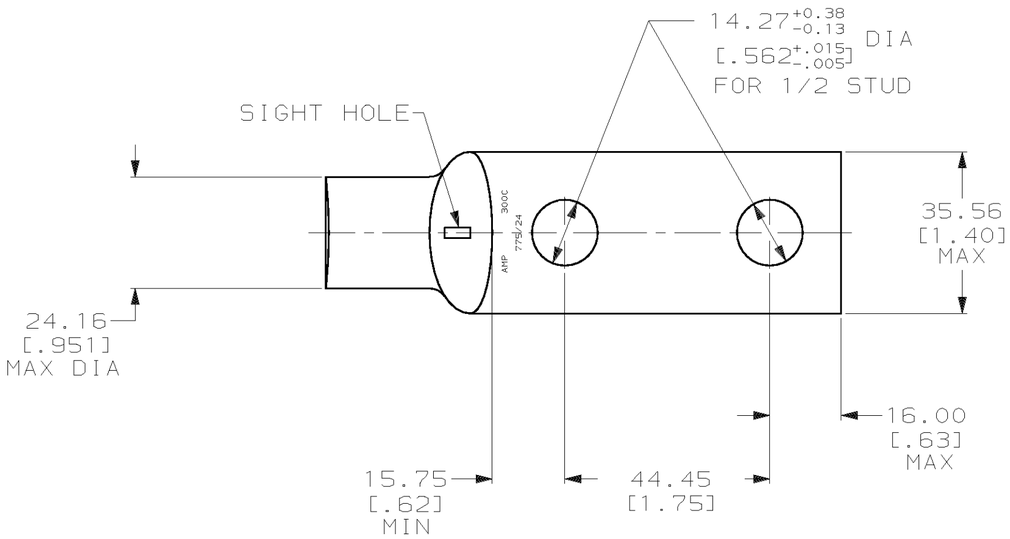

1 CIRCULAR MIL AREA RANGE: 275-325 MCM

2 TIN PL 0.00381[.000150] MIN THK PER ASTM B 545

3 CLEANED, UNPLATED

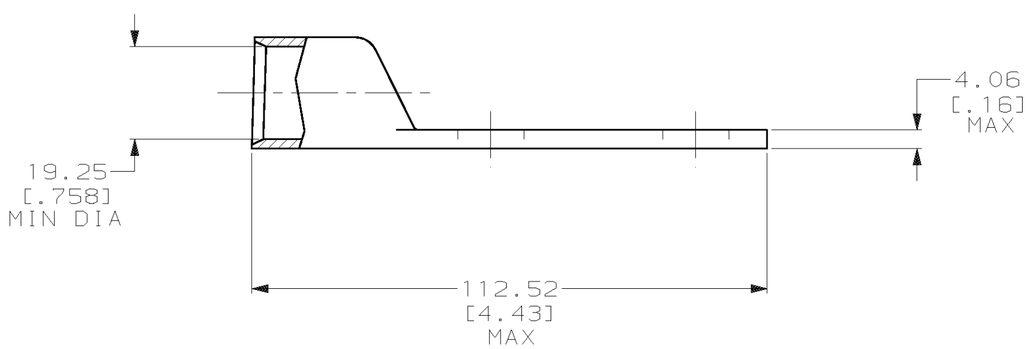

3	327286-1
2	327286
FINISH	PART NO

DO NOT SCALE PRINT.
UNLESS SPECIFIED
DIMENSIONS IN mm [INCHES]
TOLERANCES ON :
2 PLC DEC ± 0.51[.020]
3 PLC DEC ± -
ANGLES ± -

MATERIAL: ANNEALED COPPER ASTM B-75

FINISH: SEE TABLE

DR 02/28/90 DK SCHRUM
CHK 23JAN95 MS FEHER
APPD 23JAN95 WJ VOCKROTH
APPD 23JAN95 TL SHUTTER

PRODUCT SPEC: 108-30200

APPLICATION SPEC: -

WEIGHT: .250 LB

AMP INCORPORATED
Harrisburg, Pa. 17105

NAME: TERMINAL, AMPOWER, WIRE SIZE: 300 MCM

SIZE: C | CAGE CODE: 00779 | DRAWING NO: 327286

SCALE: 1:1 | SHEET: 1 OF 1

METRIC

CUSTOMER DRAWING

AMP 1471-6 REV 6-89

23-JAN-95 10:30:32 amp26463 /files/dept1123/dwg1123/u.ampower/u.rect-tongue

327286