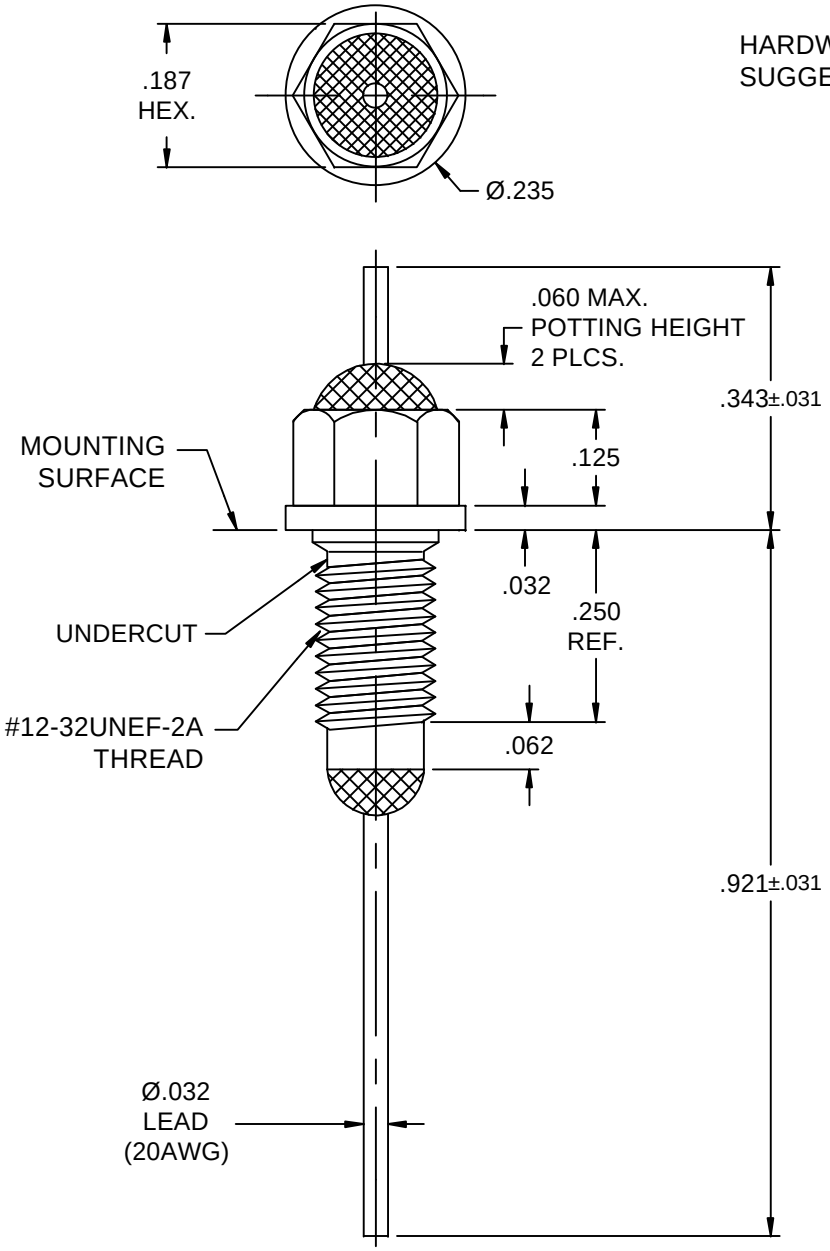

HARDWARE IS INCLUDED
SUGGESTED MOUNTING HOLE: Ø.221

LEAD FINISH	SILVER
BUSHING FINISH	SILVER
CAPACITANCE	3000pF MIN.
TEMP. RANGE	-55°C TO +125°C
CURRENT	10 AMP
WORKING VOLTAGE	85°C 350 VDC 125°C 200 VDC
DC RESISTANCE	.01ohms MAX.

I.L. PER MIL-STD-220, NO LOAD

FREQ. MHz	I.L. (db)
10	5
50	N/A
100	45
1 GHz	70
10 GHz	70

SCHEMATIC:

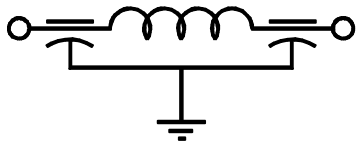

MARKING:

PART: S1270F024
BAG: SCI 1270F-024
DATE CODE
LOT #
QTY./BAG (100 MAX.)

RoHS COMPLIANT

REV NO	CHANGE NOTICE
00	CN 38701-ENG

UNLESS OTHERWISE SPECIFIED DIMENSIONS ARE IN INCHES

DO NOT SCALE

THIRD ANGLE PROJECTION

TOLERANCES UNLESS OTHERWISE SPECIFIED
DECIMAL .X ± .030
DECIMAL .XX ± .010
DECIMAL .XXX ± .005
ANGLES ± 0° 30'
CODE IDENT. NUMBER 0LSP2

SPECTRUM CONTROL INC.
FAIRVIEW PENNSYLVANIA

DWN. P. Wells
DATE 12-11-07
ENGR. J. Kraus
SHEET 1 OF 1

DESCRIPTION: SINGLE LINE FILTER Pi BUSHING

1270F-024
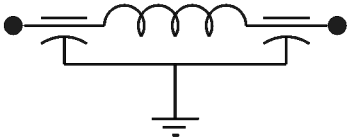
Quality Products From The Specialists In Electro—Magnetic Compatibility