THIS DRAWING IS UNPUBLISHED. RELEASED FOR PUBLICATION - ,- .
© COPYRIGHT - By - ALL RIGHTS RESERVED.

LOC	DIST
CM	00

REVISIONS

P	LTR	DESCRIPTION	DATE	DWN	APVD
	AD1	REVISED PER ECO-13-000775	10JAN13	DZ	YHM

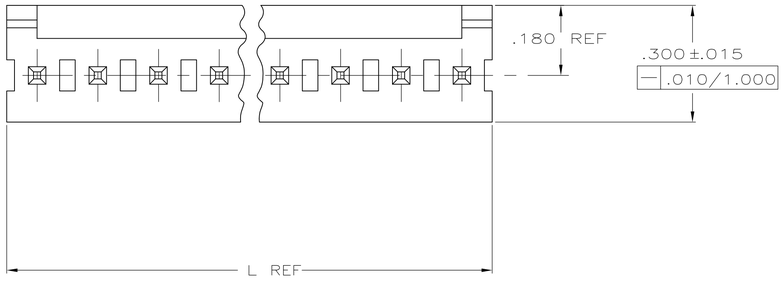

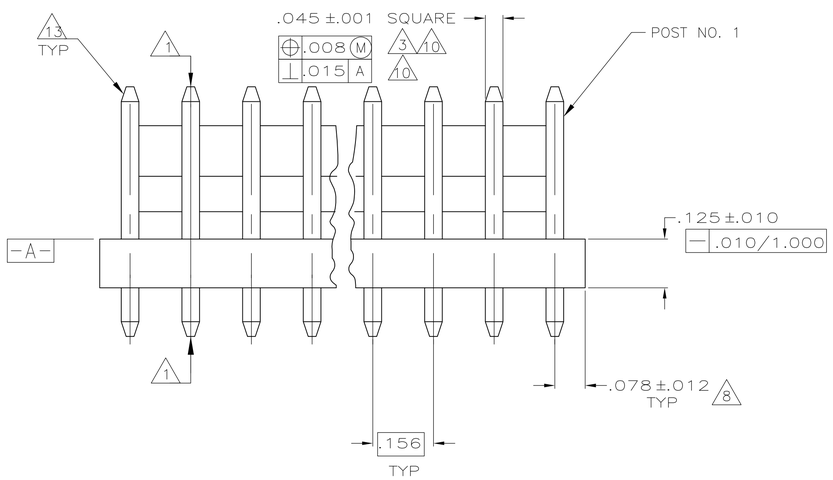

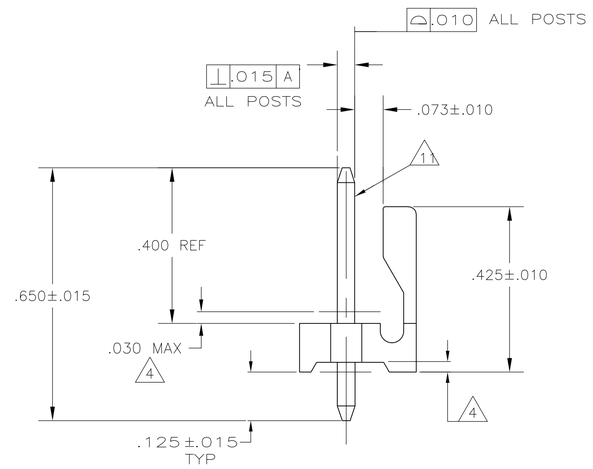

1. POST TO WITHSTAND 13 NEWTONS (3LBS.) MIN. AXIAL FORCE IN BOTH DIRECTIONS SHOWN WITHOUT DISLODGING.
2. TOLERANCES APPLY TO SOLDER SIDE OF BOARD.
3. MEASURED AT SURFACE -A-
4. PLASTIC FLASH PERMITTED IN THIS AREA.
5. PARTS COMPLY WITH AMP SOLDERABILITY SPEC. NO. 109-11-2.
6. ONE HOLE MAY BE UNDERSIZED (.065/.060 DIA.) FOR ASSEMBLY RETENTION DURING WAVE SOLDERING.
7. MATERIAL: HEADER-THERMOPLASTIC POLYESTER GLASS-FILLED 94V-O (NATURAL) POST-COPPER ALLOY (TIN PLATED)
8. COORDINATE DIMENSION APPLIES FROM CENTER OF ACTUAL FEATURE.
9. PLASTIC BURRS CAUSED BY CUT-OFF TOOLING ARE PERMITTED WITHIN THE MAXIMUM TOLERANCE ENVELOPE.
10. POST TO BE MEASURED WHEN STRIP IS HELD FLAT.
11. POST MUST WITHSTAND TWO 90° BENDS AGAINST EXTRUSION WITHOUT BREAKING.
12. DIMENSION SHOULD BE .175 MIN WHEN MATING WITH A MTA 156 CONNECTOR ASSEMBLY OR A SL-156 CONNECTOR ASSEMBLY.
13. PIN BURR OF .005 MAX. VERTICAL AND .003 MAX. HORIZONTAL PERMITTED AT POST TIPS ON BOTH ENDS.
14. SPECIAL PACKAGING VARIATION FOR IMPROVED PRODUCT PROTECTION.

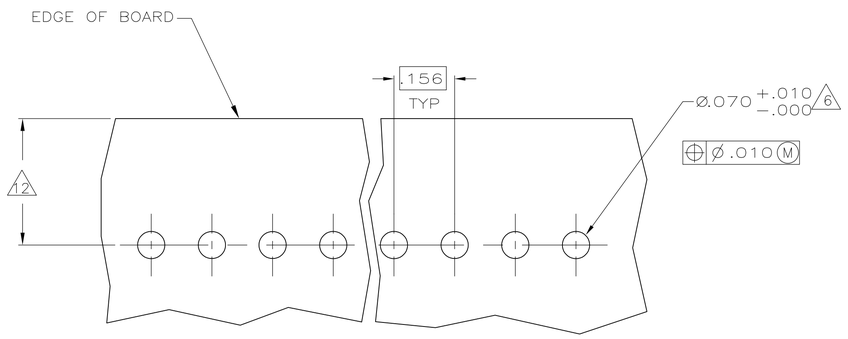

RECOMMENDED MOUNTING HOLE PATTERN 2
FOR .063 THICK P.C. BOARD

L MM	L [IN]	NUMBER OF POSITIONS	PART NUMBER
31.70	1.248	8	3-640445-8 4
95.10	3.744	24	2-640445-4
91.14	3.588	23	2-640445-3
87.17	3.432	22	2-640445-2
83.21	3.276	21	2-640445-1
79.25	3.120	20	2-640445-0
75.29	2.964	19	1-640445-9
71.32	2.808	18	1-640445-8
67.36	2.652	17	1-640445-7
63.40	2.496	16	1-640445-6
59.44	2.340	15	1-640445-5
55.47	2.184	14	1-640445-4
51.51	2.028	13	1-640445-3
47.55	1.872	12	1-640445-2
43.59	1.716	11	1-640445-1
39.62	1.560	10	1-640445-0
35.66	1.404	9	640445-9
31.70	1.248	8	640445-8
27.74	1.092	7	640445-7
23.77	.936	6	640445-6
19.81	.780	5	640445-5
15.85	.624	4	640445-4
11.89	.468	3	640445-3
7.92	.312	2	640445-2

.068	1.73	1.000	25.40
.065	1.65	.700	17.78
.063	1.60	.450	11.43
.060	1.52	.425	10.80
.045	1.14	.400	10.16
.030	0.76	.300	7.62
.015	0.38	.180	4.57
.012	0.30	.175	4.45
.010	0.25	.156	3.96
.008	0.20	.125	3.18
.005	0.13	.078	1.98
.003	0.08	.073	1.85
.001	0.03	.070	1.78
[IN]	MM	[IN]	MM

CONVERSION TABLE

THIS DRAWING IS A CONTROLLED DOCUMENT.

DIMENSIONS: INCHES

TOLERANCES UNLESS OTHERWISE SPECIFIED:
0 PLC ±
1 PLC ±
2 PLC ±
3 PLC ± .005
4 PLC ±
ANGLES ±

MATERIAL 7 FINISH 7

DWN S. HOOVER 05-NOV-2002
CHK D. BOSSI 05-NOV-2002
APVD D. BOSSI 05-NOV-2002
PRODUCT SPEC
APPLICATION SPEC
WEIGHT

TE Connectivity

NAME MTA-156 HEADER ASSEMBLY, FRICTION LOCK, STRAIGHT .045 SQUARE POST, TIN PLATED

SIZE	CAGE CODE	DRAWING NO	RESTRICTED TO
A1	00779	C-640445	—

CUSTOMER DRAWING | SCALE 5:1 | SHEET 1 OF 1 | REV AD1

4805 (3/11)