FCIconnect.com

PRODUCT NUMBER	PITCH
VPxx65x700J0G	10.16 mm

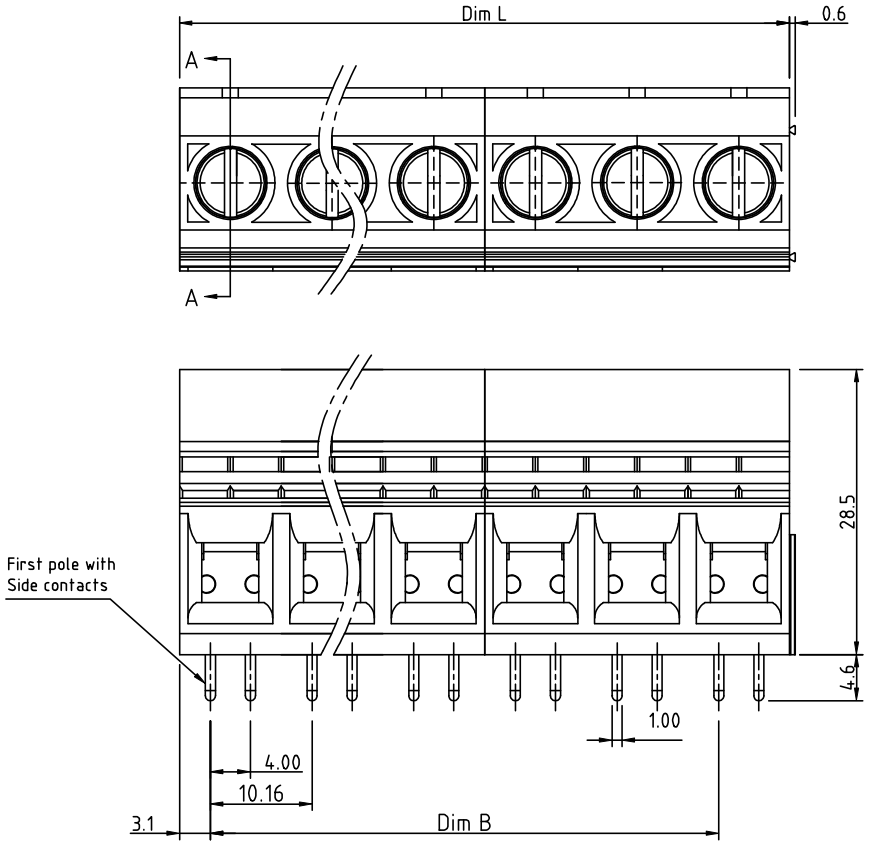

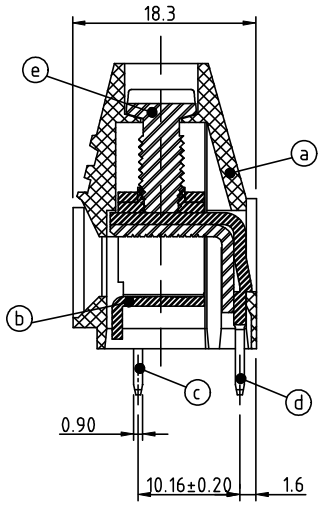

SECTION A-A

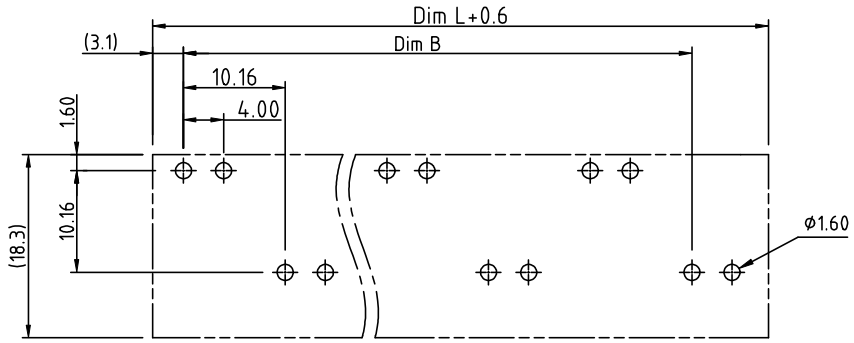

RECOMMENDED P.C.B LAYOUT
TOP VIEW

Material:
- Item ⓐ Terminal housing :Thermoplastic (UL 94V-0)
- Item ⓑ Clamp : Steel stamping , Zinc plated
- Item ⓒ Solder pin1: Copper , Tin plated
- Item ⓓ Solder pin2: Copper, Tin plated
- Item ⓔ Terminal screw: Steel Zinc plating"-"slot type

Electrical	cULus	IEC
Voltage rating :	300V	1000V
Current rating :	65A	76A
Wire range :		
Solid wire (AWG) :	6-20 / 16mm²	
Stranded wire (AWG) :	6-20 / 16mm²	
Torque :	19 Lb-In / 1.2 N.m	
Screw :	M4.5	
Wire strip length :	10~11mm	
Withstanding voltage :	1.6KV / 6KV	
Operating temperature :	-40°C+115°C	
Soldering temperature :	260°C+5°C/5 Sec	
Safety Approval :	c UL us	

PART NO.: VP xx 6 5 x 7 00J0 G

N = Number of poles
Dim L=N×10.16
Dim B=(N-1)×10.16

Poles	Tolerance
2P/4p	±0.15
6P/8p	±0.25
10P/12p	±0.35

End Stackable
No. of poles
02 2 poles
04 4 poles
... ...
12 12 poles

Body Color
0 Black (RAL9005)
2 Red (RAL3001/D)
3 Orange(RAL2011/P)
4 Yellow(RAL1018/A)
5 Green(RAL6018/T)
6 Blue (RAL5015/A)
8 Grey(RAL7035/D)
9 White(RAL1102)
C Green(RAL6018/U)

RoHS compliant
(lead<4%)
In copper Alloy

mat'l. code				surface ASME Y14.5	tolerance ASME Y14.5	projection	product family TERMINAL BLOCK
ltr	ecn no	dr	date	tolerances unless otherwise specified			title TERMINAL BLOCK
				angles	linear X.±0.5 / X.X±0.3 / X.XX±0.1	MM	RISING CLAMP,DOUBLE INTERLACE TAIL TYPE,EVEN POLES
				X°±1°		scale	
				dr	EVIN ZHONG 041414	FCI	dwg no VPxx65x700J0G sheet 1 of 2 size A4
				engr	EVIN ZHONG 041414		
				chr	HANKE FENG 041414		
				appd	SHI JUN 041414		type CUSTOMER Drawing
sheet index	revision	A					
	sheet	1					

form: A4mmXLc

FCIconnect.com

PRODUCT NUMBER	PITCH
VPxx65x700J0G	10.16 mm

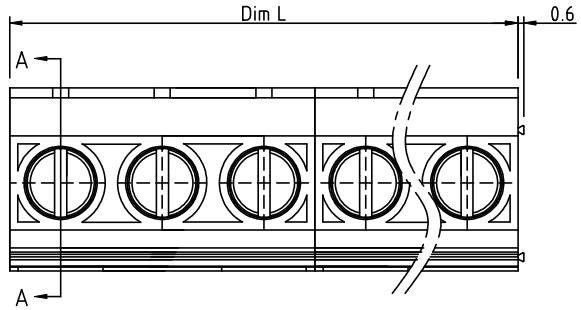

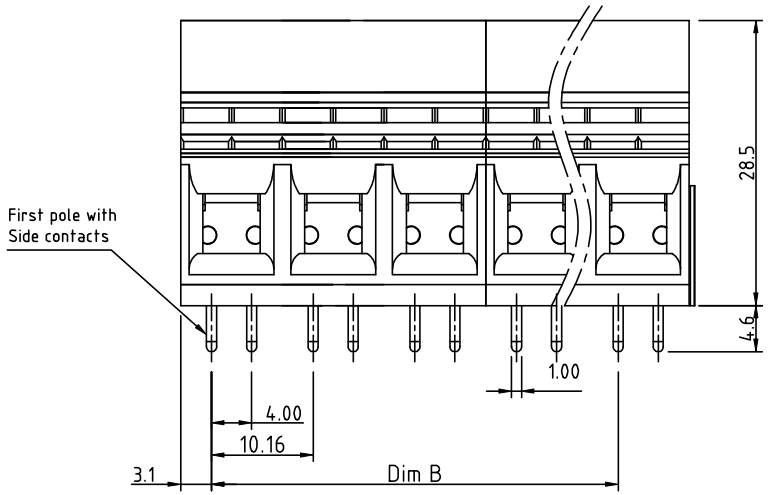

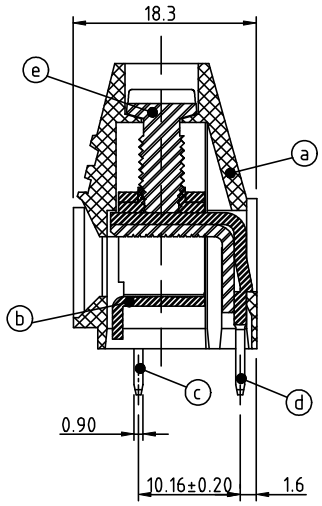

SECTION A-A

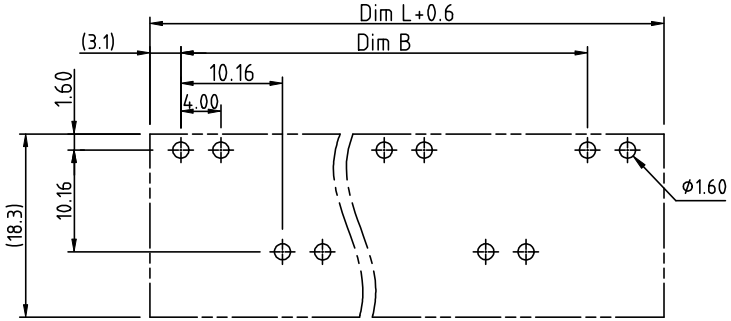

RECOMMENDED P.C.B LAYOUT
TOP VIEW

Material:
- Item ⓐ Terminal housing :Thermoplastic (UL 94V-0)
- Item ⓑ Clamp : Steel stamping , Zinc plated
- Item ⓒ Solder pin1: Copper , Tin plated
- Item ⓓ Solder pin2: Copper , Tin plated
- Item ⓔ Terminal screw: Steel Zinc plating"-"slot type

Electrical	cULus	IEC
Voltage rating :	300V	1000V
Current rating :	65A	76A

- Wire range :
- Solid wire (AWG) : 6-20 / 16mm²
- Stranded wire (AWG) : 6-20 / 16mm²
- Torque : 19 Lb-In / 1.2 N.m
- Screw : M4.5
- Wire strip length : 10~11mm
- Withstanding voltage : 1.6KV / 6KV
- Operating temperature : -40°C+115°C
- Soldering temperature : 260°C+5°C/5 Sec
- Safety Approval : c UL us

PART NO.: VP xx 6 5 x 7 00J0 G

N = Number of poles
Dim L=N×10.16
Dim B=(N-1)×10.16

Poles	Tolerance
3P	±0.15
5P/7P	±0.25
9P/11P	±0.35

End Stackable
No. of poles
03 3 poles
05 5 poles
... ...
11 11 poles

Body Color
0 Black (RAL9005)
2 Red (RAL3001/D)
3 Orange(RAL2011/P)
4 Yellow(RAL1018/A)
5 Green(RAL6018/T)
6 Blue (RAL5015/A)
8 Grey(RAL7035/D)
9 White(RAL1102)
C Green(RAL6018/U)

RoHS compliant
(lead<4%)
In copper Alloy

mat'l. code				surface ASME Y14.5	tolerance ASME Y14.5	projection	product family TERMINAL BLOCK
ltr	ecn no	dr	date	tolerances unless otherwise specified			title TERMINAL BLOCK
				angles	linear X.±0.5 / X.X±0.3 / X.XX±0.1	MM	RISING CLAMP,DOUBLE INTERLACE TAIL TYPE,ODD POLES
				X°±1°		scale	
				dr	EVIN ZHONG 041414		dwg no VPxx65x700J0G — sheet 2 of 2 — size A4
				engr	EVIN ZHONG 041414		
				chr	HANKE FENG 041414		
				appd	SHI JUN 041414		type CUSTOMER Drawing
sheet index	revision	A					
	sheet	2					

form: A4mmXLc

PDS: Rev :A STATUS:Released Printed: May 28, 2014