Features:

- Motor: Brushless DC
- Motor Protection: IC
- Bearing Type: Two Ball
- Connection: UL 1007 AWG 22, 360mm Wire Leads
- Frame Material: Aluminum Alloy
- Impeller Material: Plastic UL94V-0
- Operating Temp:
  Two Ball: -20°C~70°C
- Life Expectancy:
  Two Ball: 50,000 Hours
  Two Ball: 100,000 Hours (-L)

Fan-S Division

HPLC

RoHS Compliant

Model No.	Volt.	Current	Power	Rated Speed	Maximum AirFlow		Maximum Static Pressure		Noise Level	Weight
	(VDC)	(A)	(W)	(rpm)	(CMM)	(CFM)	(InAq)	(mmAq)	(dB/A)	(g)
FDD1-17251CBAW3 * #	12	1.31	15.72	2800	6.23	220	0.571	14.5	52.0	1070
FDD1-17251CBLW3 * #	12	1.88	22.56	3200	7.22	255	0.736	18.7	56.0	1070
FDD1-17251CBMW3 * #	12	2.75	33.00	3600	8.21	290	0.925	23.5	60.0	1070
FDD1-17251CBHW3 * #	12	3.73	44.76	4000	9.20	325	1.134	28.8	64.0	1070
FDD1-17251DBAW3 * #	24	0.65	15.60	2800	6.23	220	0.571	14.5	52.0	1070
FDD1-17251DBLW3 * #	24	0.89	21.36	3200	7.22	255	0.736	18.7	56.0	1070
FDD1-17251DBMW3 * #	24	1.21	29.04	3600	8.21	290	0.925	23.5	60.0	1070
FDD1-17251DBHW3 * #	24	1.69	40.56	4000	9.20	325	1.134	28.8	64.0	1070
FDD1-17251DBJW3 * #	24	2.41	57.84	4400	10.10	355	1.343	34.1	68.0	1070
FDD1-17251DBKW3 * #	24	2.94	70.56	4800	11.00	390	1.587	40.3	72.0	1070
FDD1-17251EBAW3 * #	48	0.33	15.84	2800	6.23	220	0.571	14.5	52.0	1070
FDD1-17251EBLW3 * #	48	0.45	21.60	3200	7.22	255	0.736	18.7	56.0	1070
FDD1-17251EBMW3 * #	48	0.60	28.80	3600	8.21	290	0.925	23.5	60.0	1070
FDD1-17251EBHW3 * #	48	0.79	37.92	4000	9.20	325	1.134	28.8	64.0	1070
FDD1-17251EBJW3 * #	48	1.15	55.20	4400	10.10	355	1.343	34.1	68.0	1070
FDD1-17251EBKW3 * #	48	1.48	71.04	4800	11.00	390	1.587	40.3	72.0	1070

* Indicates "2" (No Special Function), "3" (Alarm), "4" (Speed Sensor), "9" (PWM), "B" (PWM + Speed Sensor) or "C" (Alarm + Speed Sensor)

\# Indicates "-L" (100,000 Hours Life Expectancy) or Leave Blank (50,000 Hours Life Expectancy)
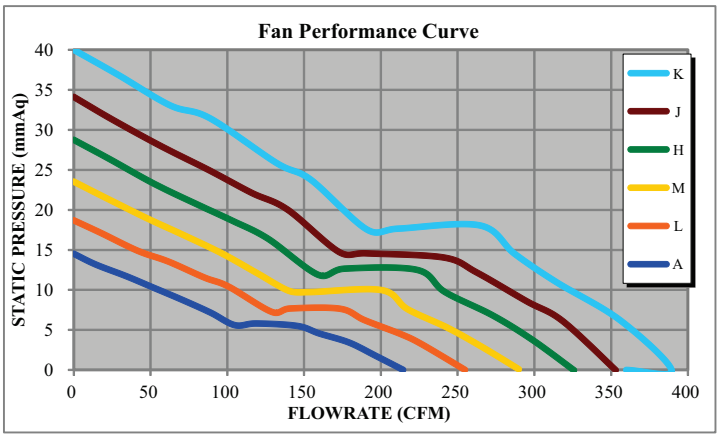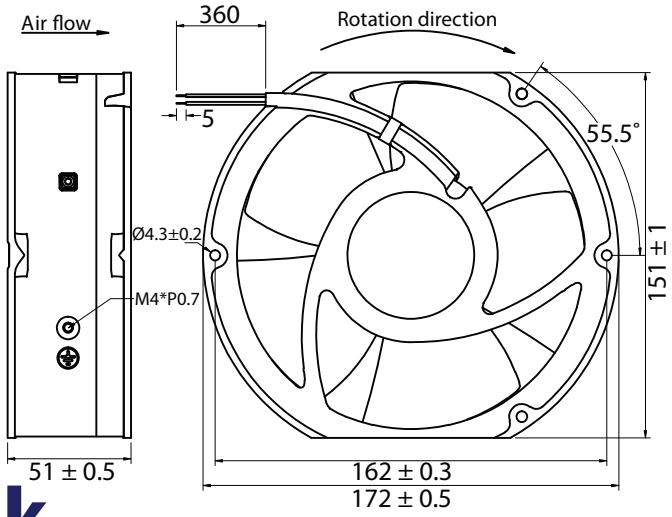
Noise is measured at the distance of one (1) meter from the axis of intake.