LEADED PRODUCT NUMBER	AS AVAILABLE
54122-XXX-XX-XXXX	

RoHs COMPATIBLE PRODUCT NUMBER
54122-XXXXXXXXXXLF

PLATING

1 = 0.76µm GOLD/GXT ON CONTACT AREA
2µm MIN MATTE TIN ON TAIL
OVER 1.27µm Ni MIN

8 = 0.38µm GOLD/GXT ON CONTACT AREA
2µm MIN MATTE TIN ON TAIL
OVER 1.27µm Ni MIN

4 = 2µm MIN MATTE TIN
OVER 1.27µm Ni MIN

INDICATES THE PRODUCT IS RoHS COMPATIBLE SEE NOTE 9

R : RETENTIVE LEG NOTE 8

STACK HEIGHT, NOTE 6

TOTAL NB OF POSITIONS 04 TO 72

NOTES:

1. HOUSING MAT'L : HIGH TEMPERATURE THERMOPLASTIC. UL94V-0 COLOR: BLACK
2. PIN MATERIAL : PHOSPHOR BRONZE
3. PRODUCT PACKAGED IN PLASTIC BOX
4. 9N MIN RETENTION IN EITHER DIRECTION
5. TO DETERMINE DIMENSIONS :
   N = NUMBER OF POSITIONS PER ROW
   EXAMPLE : 8 POS PER ROW, N x 2.54 = 20.32mm
6. XXXX = MILLIMETERS
   SPECIFY MILLIMETERS
   5.0mm MIN TO 60.00mm MAX AVAILABLE
   OAL 65.0MM MAX AVAILABLE.
   EXAMPLE FOR STACK HEIGHT: 1 2 5 0 = 12.5mm
7. MATING LENGTH = (OAL)-(3.05)-(STACK HEIGHT)
8. RETENTION IS APPLIED TO TWO ADJACENT PINS AT EACH END OF THE PRODUCT SEE SCHEMA 1
   OMIT FROM PRODUCT NUMBER IF THIS FEATURE IS NOT APPLICABLE
9. RoHS COMPATIBLE PRODUCT SPECIFICATIONS
   a - PLATING:
   - "LF" MEANS THE PRODUCT IS LEAD-FREE, 2µm MINIMUM MATTE TIN OVER 1.27µm MINIMUM NICKEL UNDERPLATE.
   b - MANUFACTURING PROCESS COMPATIBILITY
   - THE HOUSING WILL WITHSTAND EXPOSURE TO 260°C ±5°C SOLDER BATH TEMPERATURE FOR 5 SECONDS IN A WAVE SOLDER APPLICATION WITH A 1.6mm MIN THICK CIRCUIT BOARD.
   c - LABELLING:
   - MEETS PACKAGING SPECS AS PER GS-14-920
   d - THIS PRODUCT MEETS EUROPEAN UNION DIRECTIVES AND OTHER COUNTRY REGULATIONS AS DESCRIBED IN GS-47-0004.

OAL	PIN STYLE
12.2	01
13.5	02
15.9	03
16.56	15
16.76	04
17.65	05
18.91	06
20.50	28
20.96	07
22.40	19
23.5	08
26.04	09
26.42	14
28.00	18
28.58	10
30.48	20
31.12	11
32.15	21
33.66	12
34.00	13
36.20	16
37.30	22
38.40	23
42.30	24
43.00	25
47.00	26
52.00	27

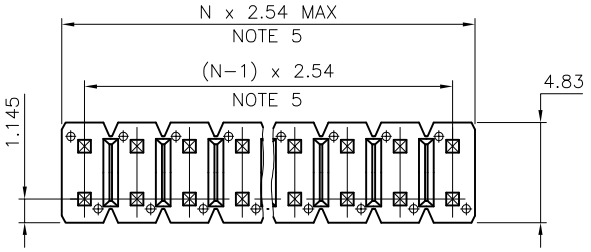

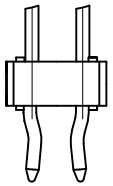

SCHEMA 1
TWO RETENTION PIN AT EACH END OF THE PRODUCT

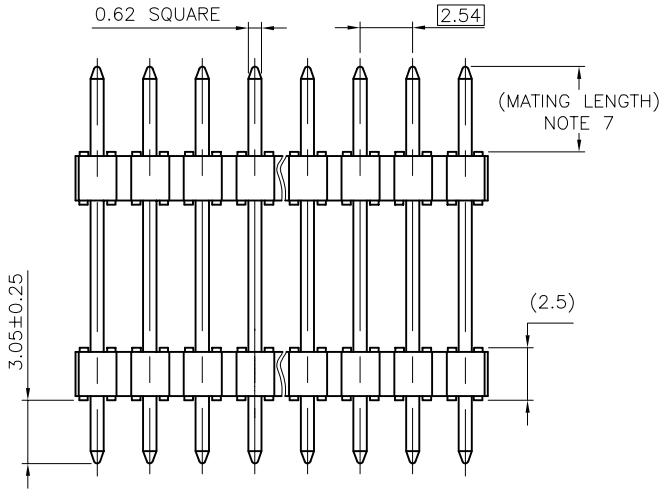

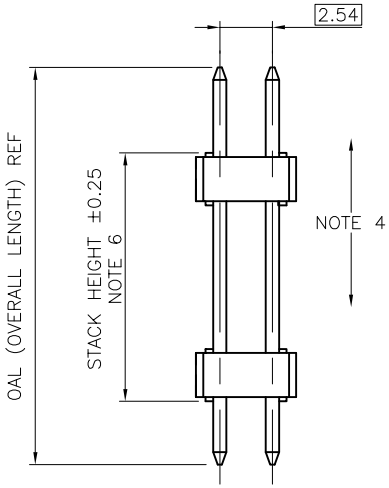

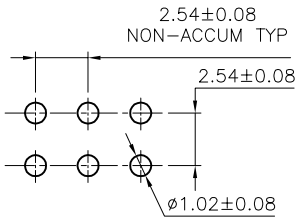

RECOMMENDED HOLE PATTERN

mat'l. code				surface	tolerance	projection	product family
SEE NOTES				ISO 1302	ISO 406 ISO 1101		BERGSTIK
ltr	ecn no	dr	date	tolerances unless otherwise specified			title
H	F08-0148	RTR	08.03.31	angles	linear x.x ±0.3	mm	UNSHR.HEADER
J	F10-0252	JCO	10.11.30		x.xx ±0.13		STR DR TMT
K	F11-0034	LMU	11.03.03		x.xxx ±0.05	scale 4:1	
L	B-15673	LMU	13.02.14	dr D.LE	01.01.24		dwg no 54122 sheet 1 of 1 size A3
				engr JM.C	01.01.24		
F	F04-0385	LMU	04.12.16	chr JM.C	01.01.24		
G	F06-0196	LMU	06.06.13	appd JF.N	01.01.24		type CUSTOMER Drawing
sheet index	revision sheet						

form: A3