Alle Rechte vorbehalten/ *All rights reserved*

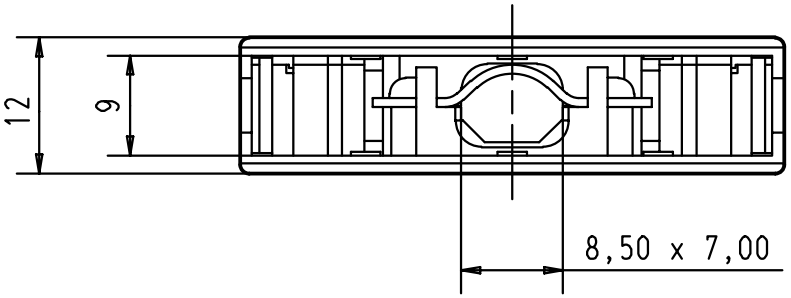

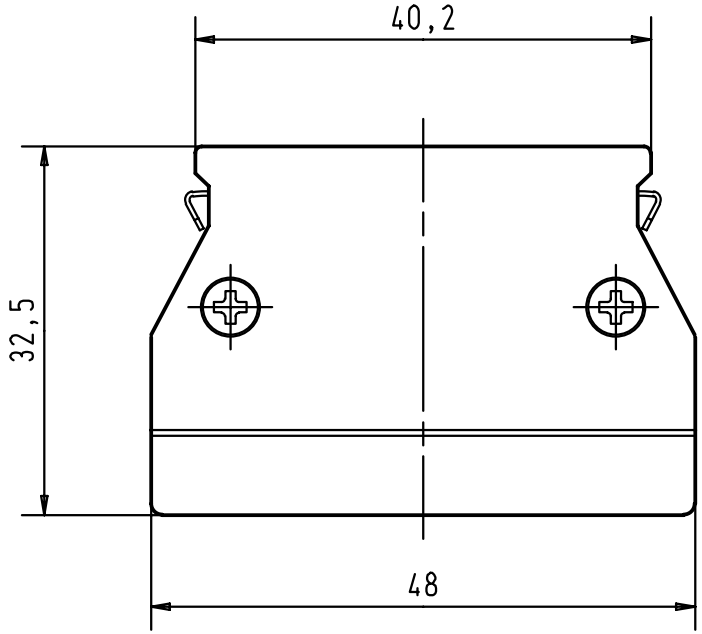

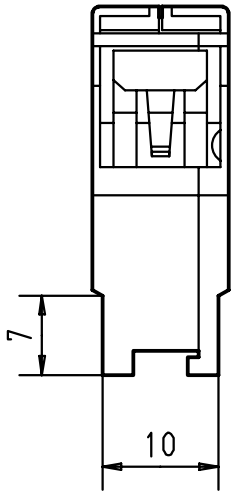

				Dat.	Name
			Detail.	21 JUN 01	S G
			Insp.		
			Stand.		
29686	21 JUN 01	S G			
Mod.	Dat.	Name			

HARTING EURL
F-95972 Paris

All Dim. in mm
Orig. Size DIN A 4

har.mik®

Metal hood 50 poles
standard cable entry

TB 60 03 050 0155

Sub.

Maßstab/ *Scale* 1,5:1

Blatt/ *Page* 1/1