Alle Rechte vorbehalten/ *All rights reserved*

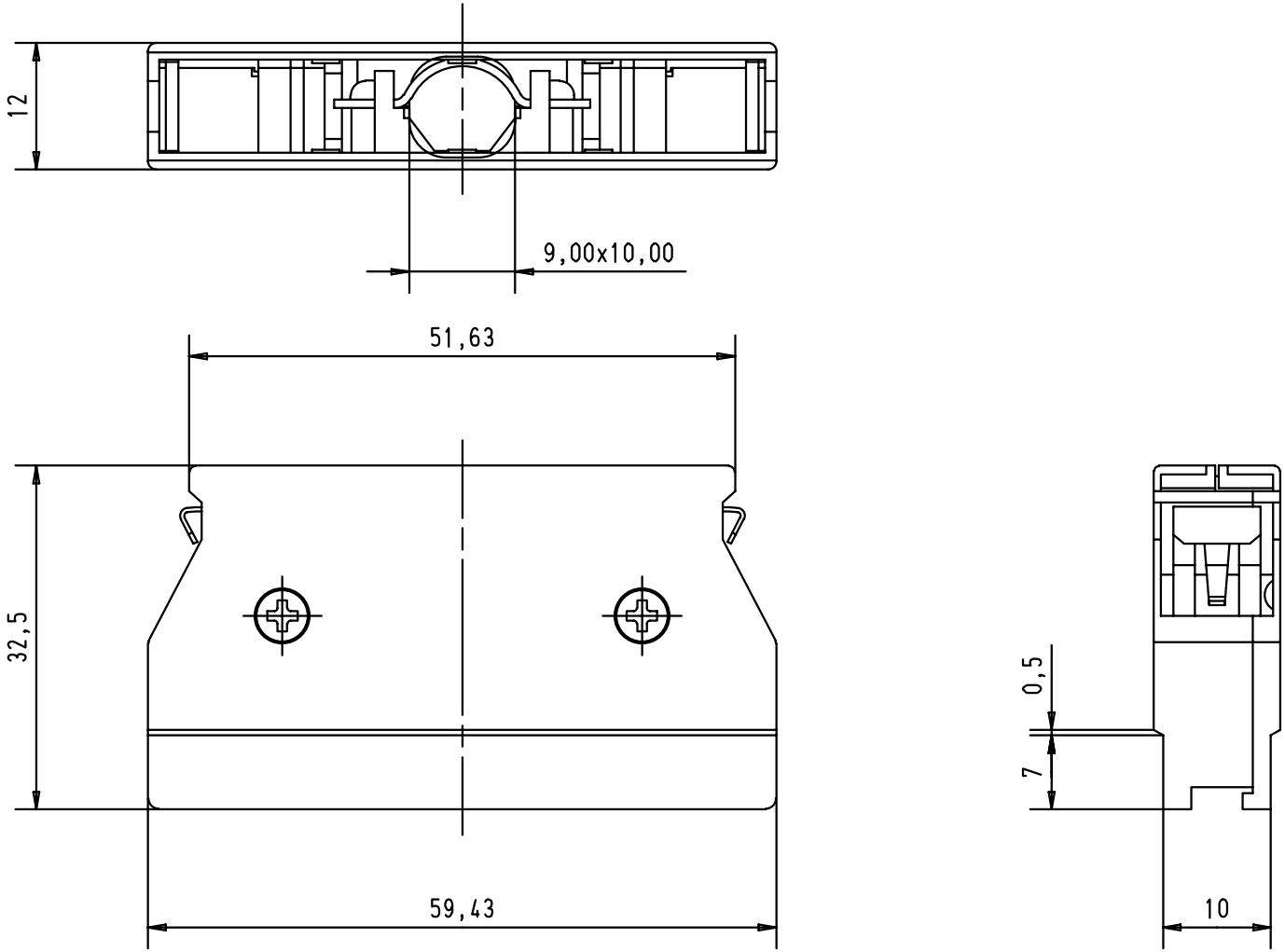

				Dat.	Name		har.mik® I/O
			Detail.	30-OCT-00	Alspace	All Dim. in mm	68 poles wide entry metal hood with loking levers
			Insp.			Orig. Size DIN A 4	
			Stand.				
27941	30-AUG-00	Alspace	HARTING EURL F-95972 Paris				TB 60 03 068 0255
Mod.	Dat.	Name					Sub.

Maßstab/ *Scale* 1,5:1

Blatt/ *Page* 1/1