THIRD ANGLE PROJ.

REVISIONS				
REV	DESCRIPTION	DATE	ECO	APPR
A	RELEASE TO MFG	2/13/03	44371	CPM
B	SEE SHEET 1	5/9/03	44466	CPM
C	CONTACT WAS CHANGED\RD-DM05072502R	07-25-05'		SH
D	SYNCH THE DRAWING WITH DANBURY\RD-DM11072801R3	23-Aug-11	48711	SH

{NOTES:
1. MATERIALS AND FINISHES:
   BODY - BeCu, GOLD PLATING, .000030 [0.8] THICK OVER NICKEL
   CONTACT - BeCu, GOLD PLATING, .000030 [0.8] THICK OVER NICKEL
   INSULATOR - PTFE
2. ELECTRICAL:
   A. IMPEDANCE: 50 OHM
   B. FREQUENCY RANGE: DC - 26.5 GHz
   C. VSWR(RETURN LOSS): 1.2 (20.8 dB), MAX. DC-10GHz
   1.4 (15.6 dB), MAX. 10-18GHz
   1.5 (14 dB), MAX. 18-26.5GHz
   D. DIELECTRIC WITHSTANDING VOLTAGE: 500 VRMS, MIN.
3. PHYSICAL:
   A. DURABILITY: 100 CYCLES MIN.
   B. ENGAGEMENT FORCE: 15 LB [67 N] MAX
   C. DISENGAGEMENT FORCE: 2 LB [9 N] MIN
   E. TEMPERATURE RANGE: -65° C TO 165° C
4. SINGLE PACKAGING:
   A. QUANTITY: SINGLE PACK
   B. MARKING: AMPHENOL, SMP-FSBA-990, YYWW
5. BULKPACK AS FOLLOWS:
   A. QUANTITY: 100 PER BAG
   B. MARK BAG OR TAG "SMP-FSBA-990B, QTY 100 & YYWW"

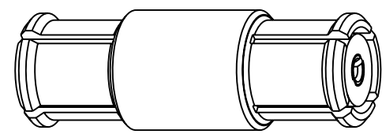

SCALE 6.000

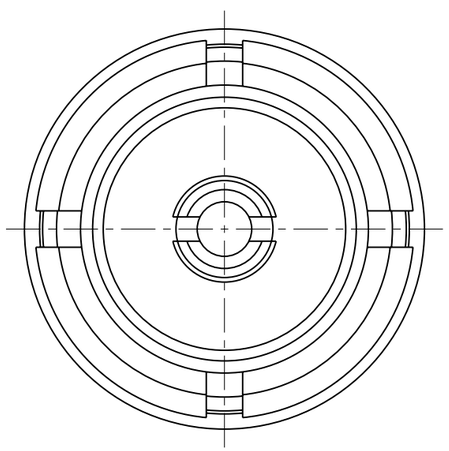

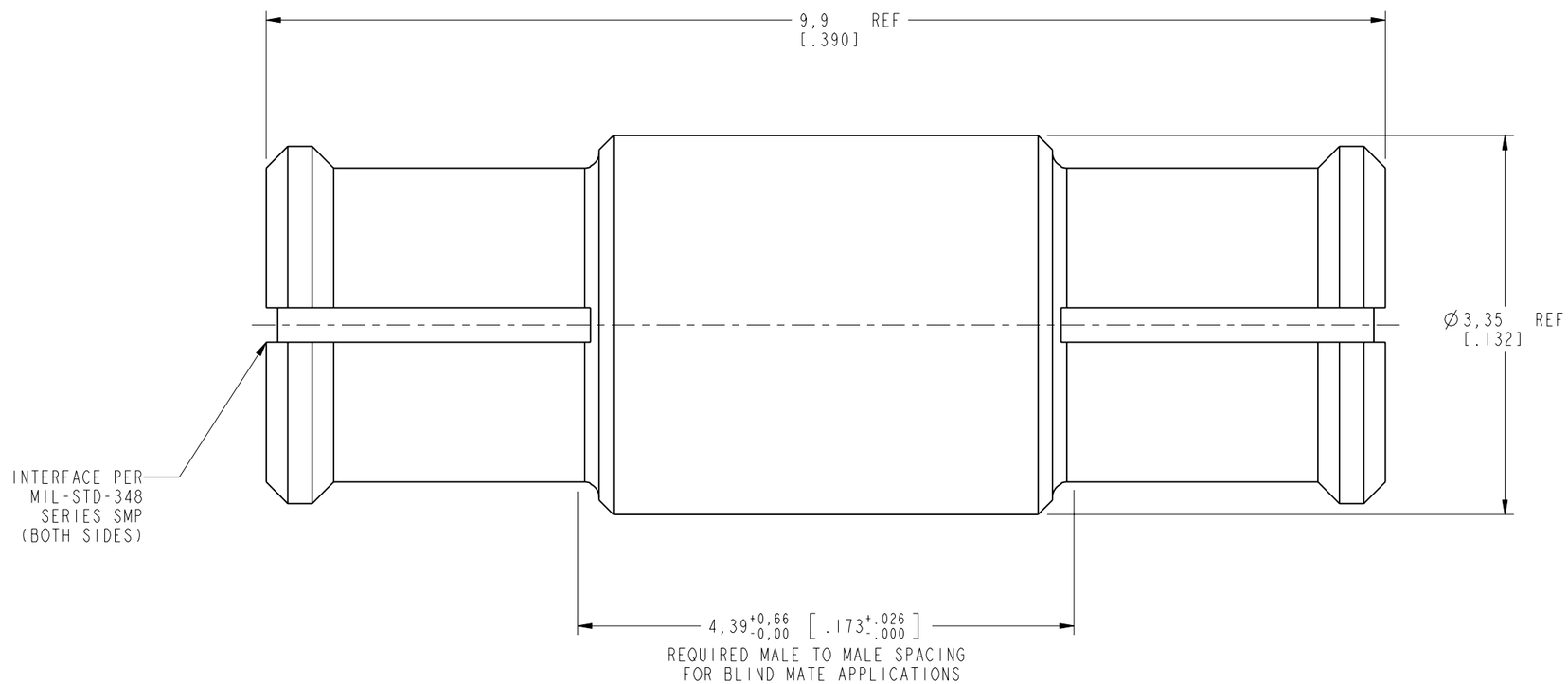

PART NUMBER	PACKAGING	REF NOTE
SMP-FSBA-990	1 PER BAG	NOTE 4
SMP-FSBA-990B	100 PER BAG	NOTE 5

CUSTOMER OUTLINE DRAWING
ALL OTHER SHEETS ARE FOR INTERNAL USE ONLY

UNLESS OTHERWISE SPECIFIED, DIMENSIONS ARE IN METRIC AND TOLERANCES ARE:

<0.5mm	0.5 - 6mm	6 - 30mm	30 - 120mm	ANGLES
± 0.05mm	±0.1mm	±0.2mm	± 0.3mm	±1°

NOTICE - These drawings, specifications, or other data (1) are, and remain the property of Amphenol corp. (2) must be returned upon request; and (3) are confidential and not to be disclosed to any person other than those to whom they are given by Amphenol Corp. the furnishing of these drawings, specifications, or other data by Amphenol Corp., or to any other person to anyone for any purpose is not to be regarded by implication or otherwise in any manner licensing, granting rights to permitting such holder or any other person to manufacture, use or sell any product, process or design, patented or otherwise, that may in any way be related to or disclosed by said drawings, specifications, or other data.

MATERIAL
-

REFERENCE
GEN# ASSYF4_SMP
EAR# 866
615X-1783

FINISH

DRAWN R.MAO	DATE 16-Aug-11	TITLE SMP BULLET ADAPTER FEMALE TO FEMALE
ENGINEER OWEN BARTHELMES	DATE 2/13/03	
APPROVED S.HSIEH	DATE 16-Aug-11	SCALE: 20.0:1.0 SHEET 2 OF 2
CAD FILE		DWG SIZE B REV D

Amphenol RF
www.amphenolrf.com

DRAWING NO.	SMP-FSBA-990-X
ITEM NO.	SMP-FSBA-990X
PART NO.	SMP-FSBA-990-X